OPERATION & PARTS MANUAL

MULTIQUIP

Mikasa SERIES

MODEL MVH-200DA2

REVERSIBLE PLATE COMPACTOR

(YANMAR L70V6 DIESEL ENGINE)

Revision #0 (01/27/06)

To find the latest revision of this publication, visit our website at: www.multiquip.com

THIS MANUAL MUST ACCOMPANY THE EQUIPMENT AT ALL TIMES.

WARNING

CALIFORNIA — Proposition 65 Warning

Diesel engine exhaust and some of its constituents are known to the State of California to cause cancer, birth defects and other reproductive harm.

NOTE PAGE

MQ MIKASA SERIES MVH-200DA2 PLATE COMPACTOR

Proposition 65 Warning 2
Here's How To Get Help 3
Table Of Contents 4
Parts Ordering Procedures 5
Specifications 6
Dimensions 7
Safety Message Alert Symbols 8-9
Rules for Safe Operation 10-11
Operation and Safety Decals 12
Features 13
Plate Compactor Components 14
Engine Components 15
Pre-Inspection 16
Start-up Procedure 17
Operation 18-19
Maintenance 20-24
Troubleshooting 25-26
Explanation Of Code In Remarks Column 28
Suggested Spare Parts 29

COMPONENT DRAWINGS

Decal Placement 30-31
Body Assembly 32-33
Vibration Assembly 34-37
Control (A-type) Assembly 38-39
Pump (A-type) Assembly 40-41
Throttle (A-type) Assembly 42-43

YANMAR L70V6GJ1R1AAS5 ENGINE

Cylinder Block Assembly 44-45
Cylinder Head Assembly 46-47
Air Cleaner Assembly 48-49
Muffler Assembly 50-51
Crankshaft and Camshaft Assembly 52-53
Piston Assembly 54-55
Lub. Oil Pump and Governor Assembly 56-57
Cooling and Starting Device Assembly 58-59
Fuel Injection Pump Assembly 60-61
Fuel Tank and Fuel Line Assembly 62-63
Starting Motor and Dynamo Assembly 64-65
Tools, Labels and Gasket Set Assembly 66-67
Accessories 68-69

Terms and Conditions Of Sale — Parts 70

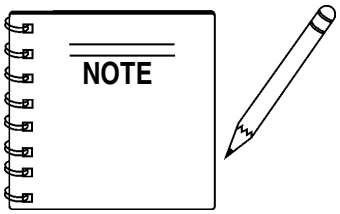

Specification and part number are subject to change without notice.

Table 1. MVH-200DA2 REVERSIBLE PLATE COMPACTOR SPECIFICATIONS	
Centrifugal Force	7,056 lbs. (3,200 kg)
Vibration Frequency	5,200 vpm
Maximum Forward Speed	75 ft/min (23 m/min)
Plate Size (L x W)	27.6 x 20 in (70 x 51 cm)
Operating Weight	449 lbs. (204 kg)
Maximum Area Capacity	7,515 sq. ft/hr (698 sq. m/hr)
HP Rating	6.7 BHP (4.9 kW)

TABLE 2. ENGINE SPECIFICATIONS	
Engine Make	YANMAR
Engine Model	L70V6GJ1R1AAS5
Engine Type	Air-cooled 4-cycle Diesel Engine
Cylinder Bore X Stroke	3.07 x 2.51 in (78 x 64 mm)
Displacement	10.34 fl oz (306 cm^3)
Maximum Ouput	6.5 HP @3,600 RPM
Fuel Tank Capacity	3.5 quarts (3.31 liters)
Oil Capacity	1.16 quarts (1.10 liters)
Starting Method D/DS	Recoil/Electric
Dry Net Weight Recoil/Electric	72.75 lbs. (33 kg)/83.77 lbs. (38 kg)
Dimensions (L x W x H)	15.11 x 16.57 x 17.71 in (384 x 421 x 450 mm)

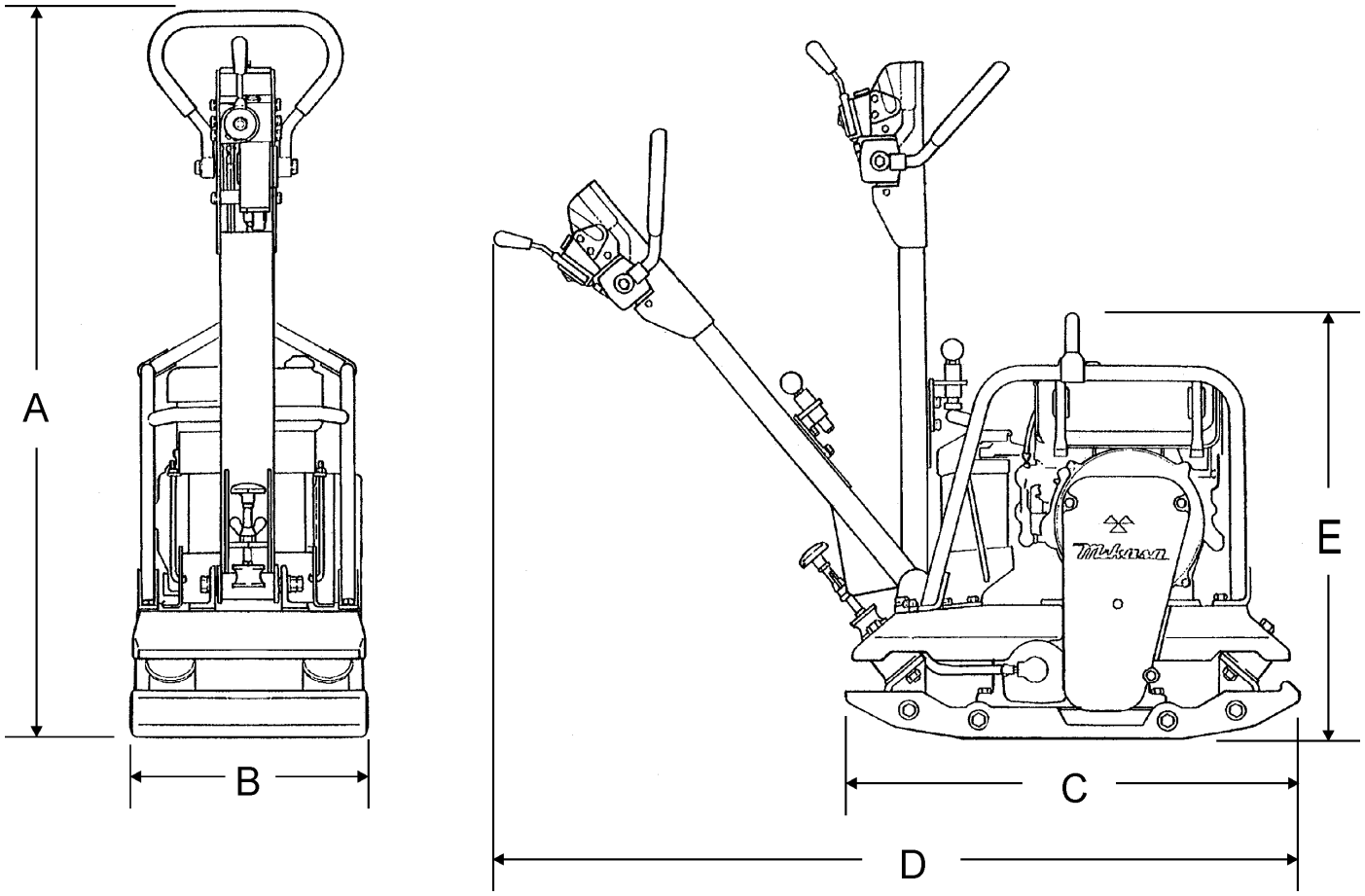

Figure 1. MVH-200DA2 Reversible Plate Compactor Dimensions

TABLE 3. DIMENSIONS	
REFERENCE LETTER	**DIMENSIONS IN. (MM)**
A	49 in. (1245 mm.)
B	21 in. (533 mm.)
C	26.5 in. (673 mm.)
D	48 in. (1219 mm.)
E	31 in. (787 mm.)

FOR YOUR SAFETY AND THE SAFETY OF OTHERS!

Safety precautions should be followed at all times when operating this equipment. Failure to read and understand the Safety Messages and Operating Instructions could result in injury to yourself and others.

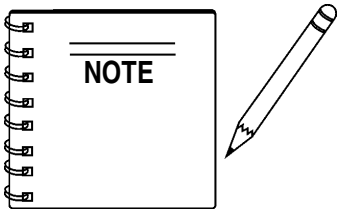

This Owner's Manual has been developed to provide complete instructions for the safe and efficient operation of the Multiquip Model MVH-200DA2 Reversible Plate Compactor.

Refer to the engine manufacturer's instructions for data relative to its safe operation.

Before using this reversible plate compactor, ensure that the operating individual has read and understands all instructions in this manual.

SAFETY MESSAGE ALERT SYMBOLS

The three (3) Safety Messages shown below will inform you about potential hazards that could injure you or others. The Safety Messages specifically address the level of exposure to the operator, and are preceded by one of three words: **DANGER**, **WARNING**, or **CAUTION**.

DANGER

You **WILL** be ***KILLED*** or ***SERIOUSLY INJURED*** if you **DO NOT** follow these directions.

WARNING

You **CAN** be **KILLED** or ***SERIOUSLY INJURED*** if you **DO NOT** follow these directions.

CAUTION

You **CAN** be ***INJURED*** if you **DO NOT** follow these directions.

Potential hazards associated with the operation of an ***MVH-200DA2 Reversible Plate Compactor*** will be referenced with Hazard Symbols which appear throughout this manual, and will be referenced in conjunction with Safety Message Alert Symbols.

HAZARD SYMBOLS

WARNING - Lethal Exhaust Gases

Engine exhaust gases contain poisonous carbon monoxide. This gas is colorless and odorless, and can cause death if inhaled. **NEVER** operate this equipment in a confined area or enclosed structure that does not provide ample free flow air.

WARNING - Explosive Fuel

Diesel fuel is extremely flammable, and its vapors can cause an explosion if ignited. **DO NOT** start the engine near spilled fuel or combustible fluids.

DO NOT fill the fuel tank while the engine is running or hot. **DO NOT** overfill tank, since spilled fuel could ignite if it comes into contact with hot engine parts or sparks from the ignition system. Store fuel in approved containers, in well-ventilated areas and away from sparks and flames.

WARNING - Burn Hazards

Engine components can generate extreme heat. To prevent burns, **DO NOT** touch these areas while the engine is running or immediately after operations. Never operate the engine with heat shields or heat guards removed.

CAUTION - Respiratory Hazard

ALWAYS wear approved ***respiratory*** protection when required.

CAUTION - Rotating Parts

NEVER operate equipment with covers, or guards removed. Keep fingers, hands, hair and clothing away from all moving parts to prevent injury.

CAUTION - Accidental Starting

ALWAYS place the power source, circuit breakers or **ON/OFF** switch in the **OFF** position, when the generator is not in use, unless connected to transfer switch.

CAUTION - Sight and Hearing Hazards

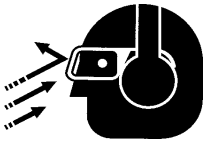

ALWAYS wear approved eye and hearing protection.

CAUTION - Equipment Damage Messages

Other important messages are provided throughout this manual to help prevent damage to your light tower, other property, or the surrounding environment.

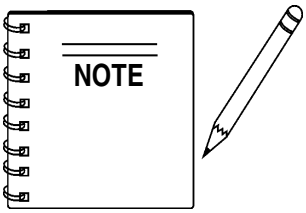

This reversible plate compactor, other property, or the surrounding environment could be damaged if you do not follow instructions.

DANGER

Failure to follow instructions in this manual may lead to serious injury or even death! This equipment is to be operated by trained and qualified personnel only! This equipment is for industrial use only.

The following safety guidelines should always be used when operating the ***compactor***.

GENERAL SAFETY

- **DO NOT** operate or service this equipment before reading this entire manual.
- This equipment should not be operated by persons under 18 years of age.
- **NEVER** operate this equipment without proper protective clothing, shatterproof glasses, steel-toed boots and other protective devices required by the job.

- **NEVER** operate this equipment when not feeling well due to fatigue, illness or taking medicine.
- **NEVER** operate this equipment under the influence or drugs or alcohol.

- Whenever necessary, replace nameplate, operation and safety decals when they become difficult read.
- **ALWAYS** check the machine for loosened threads or bolts before starting.
- **ALWAYS** wear proper respiratory (mask) hearing and eye protection equipment when operating the pump.

- **NEVER** touch the hot exhaust manifold, muffler or cylinder. Allow these parts to cool before servicing engine or plate compactor.

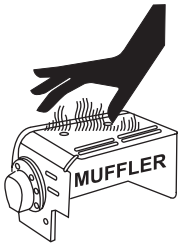

- **High Temperatures** – Allow the engine to cool before adding fuel or performing service and maintenance functions. Contact with *hot* components can cause serious burns.
- The engine of this compactor requires an adequate free flow of cooling air. ***NEVER!*** operate the compactor in any enclosed or narrow area where free flow of the air is restricted. If the air flow is restricted it will cause serious damage to the compactor or engine and may cause injury to people and property. Remember the engine gives off **DEADLY** gases.

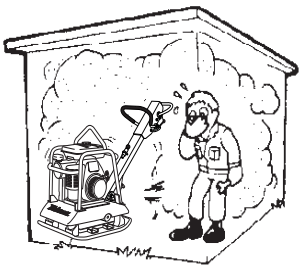

- **ALWAYS** refuel in a well-ventilated area, away from sparks and open flames.
- **ALWAYS** use extreme caution when working with **flammable** liquids. When refueling, **stop the** engine and allow it to cool. **DO NOT** smoke around or near the machine. Fire or explosion could result from fuel vapors, or if fuel is spilled on a hot engine.
- **NEVER** operate the equipment in an ***explosive atmosphere*** or near combustible materials. An explosion or fire could result causing severe ***bodily harm or even death***.

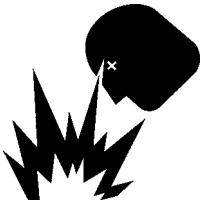

- Topping-off to filler port is dangerous, as it tends to spill fuel.
- Refer to the ***Engine Owner's Manual*** for engine technical questions or information.
- **NEVER** use accessories or attachments, which are not recommended by Multiquip for this equipment. Damage to the equipment and/or injury to user may result.
- Manufacturer does not assume responsibility for any accident due to equipment modifications.

Loading and Unloading (Crane):

- Before lifting, make sure that machine parts (hook and vibration insulator) are not damaged and screws are not loosened or lost.
- Always make sure crane or lifting device has been properly secured to the hook of guard frame on compactor.
- **NEVER** lift the machine while the engine is running.
- Use adequate lifting cable (wire or rope) of sufficient strength.
- Use one point suspension hook and lift straight upwards.
- **NEVER** allow any person or animal to stand underneath the machine while lifting.
- Try not to lift machine to unnecessary heights.

TRANSPORTING

- **ALWAYS** shutdown engine before transporting.
- Tighten fuel tank cap securely and close fuel cock to prevent fuel from spilling.
- Drain fuel when transporting compactor over long distances or bad roads.
- **ALWAYS** tie down the compactor during transportation by securing the compactor's guard frame with rope.

Figure 18. Lifting the Compactor

Maintenance Safety:

- **NEVER** lubricate components or attempt service on a running machine.
- **ALWAYS** allow the machine a proper amount of time to cool before servicing.
- Keep the machinery in proper running condition.
- Fix damage to the machine immediately and always replace broken parts.
- Dispose of hazardous waste properly. Examples of potentially hazardous waste are used motor oil, fuel and fuel filters.
- **DO NOT** use food or plastic containers to dispose of hazardous waste.
- **DO NOT** pour waste, oil or fuel directly onto the ground, down a drain or into any water source.

Emergencies

- **ALWAYS** know the location of the nearest ***fire extinguisher.***

- **ALWAYS** know the location of the nearest ***first aid kit.***

- In emergencies ***always*** know the location of the nearest phone or ***keep a phone on the job site***. Also know the phone numbers of the nearest ***ambulance***, ***doctor*** and ***fire department***. This information will be invaluable in case of an emergency.

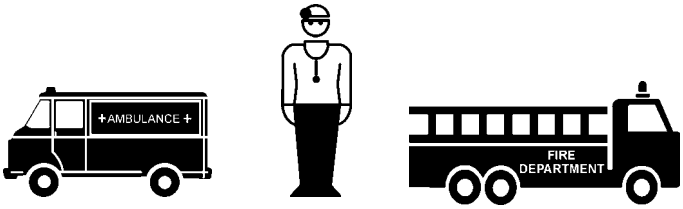

Figure 2 displays the operation and safety decals as they appear on the reversible plate compactor. Should any of these decals become damaged or unreadable, contact the Multiquip Parts Department for a replacement set.

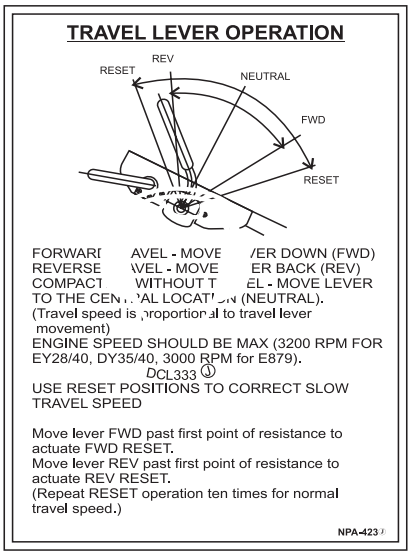

P/N: 920204230

P/N: 920204040

P/N: TBD

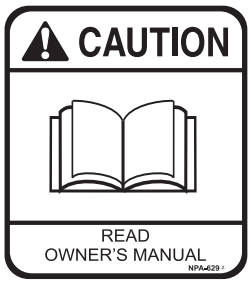

P/N: 920206290

P/N: 920206880

P/N: 920206280

P/N: 920203260

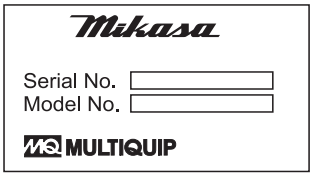

CONTACT
PARTS DEPT.

P/N: 920203330

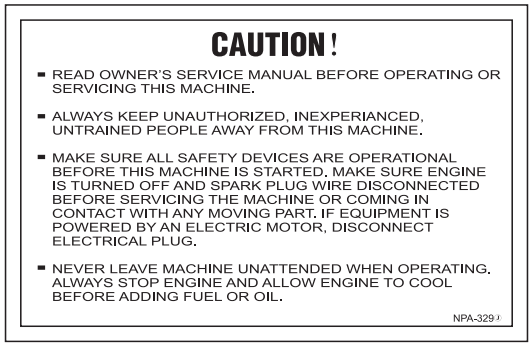

P/N: 920203290

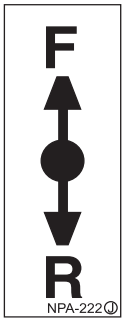

P/N: 920202220

P/N: 920203560

P/N: 920204580

Figure 2. Operation and Safety Decals

Plate Compactor

The Mikasa MVH-200DA2 is a walk-behind, reversible plate compactor designed for the compaction of sand, clay and asphalt. This plate compactor is a powerful compacting tool capable of applying a tremendous force in consecutive high frequency vibrations to a soil surface. Its applications include soil compacting for road, embankments and reservoirs as well as backfilling for gas pipelines, water pipelines and cable installation work.

Vibratory Plates

The vibratory plates of the MVH-200DA2 produce low amplitude high frequency vibrations, designed to compact granular soils.

The resulting vibrations cause forward motion. The engine and handle are vibration isolated from the vibrating plate. The heavier the plate, the more compaction force it generates.

Reversible Vibratory Plates

Reversible vibratory plates have two eccentric weights that allow a smooth transition for forward and reverse travel, plus increased compaction force as the result of dual weights.

Due to their weight and force, reversible plates are ideal for semi-cohesive soils.

Frequency/Speed

The compactor's vibrating plate maximum frequency is 5200 vpm (vibrations per minute). The forward and reverse travel speed of the compactor is approximately 75 ft./minute (23 meters/ minute).

Engine

The Mikasa MVH-200DA2 Plate Compactor is equipped with an air-cooled, 4-stroke, single-cylinder YANMAR L70V6 diesel engine.

Controls

Before starting the MVH-200DA2 Plate Compactor, identify and understand the function of the controls and components as indicated in Figure 3.

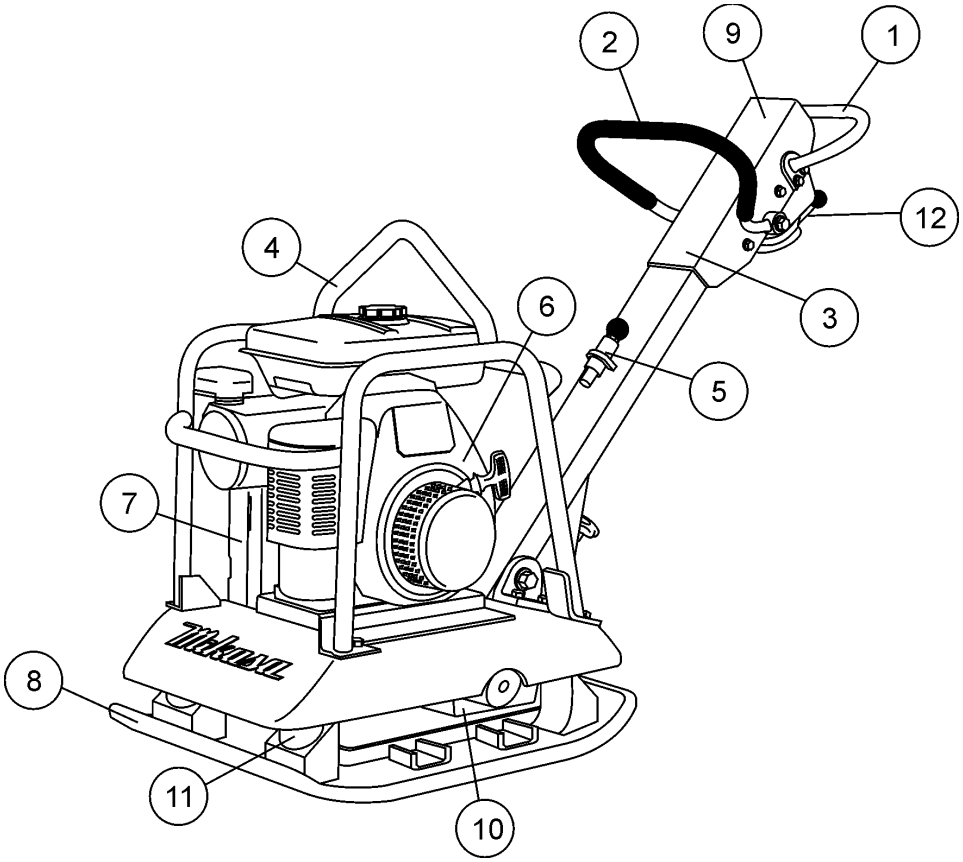

Figure 3. MVH-200DA2 Components

Figure 3 illustrates the location of the major components for the MVH-200DA2 Reversible Plate Compactor. The function of each component is described below:

1. **Hand Grip –** When operating the compactor use this hand grip to maneuver the compactor.
2. **Forward & Reverse Lever –** ***Push*** the lever forward, the compactor will move in a forward direction, ***pull*** the lever backwards, the compactor will move in backwards direction. Placing the lever in the middle (midway) will cause the compactor not to move (neutral).
3. **Handle Bar –** When operating the compactor, this handle is to be in the downward position. When the compactor is to be ***stored***, move the handle bar to the upright position.
4. **Guard Hook** - Used to lift the machine with crane or other lifting device.
5. **Stopper** - Locks the handle in place in the upward position for stowing.
6. **Engine –**This plate compactor uses a *YANMAR L70V6* engine. Refer to the owner's manual for engine information and related topics.
7. **Belt Cover –** Remove this cover to gain access to the V-belts. **NEVER** run the compactor without the V-belt cover. If the V-belt cover is not installed, the possibility exists that your hand may get caught between the V-belt and clutch, thus causing serious injury and bodily harm.
8. **Base Plate –** Designed to compact sand, clay, and asphalt.
9. **Oil Tank –** Fill with proper grade of engine oil.
10. **Vibration Case –** Encloses the eccentric, gears and counter weights.
11. **Shock Absorber –** Protects plate compactor from damage by absorbing vibration during operation.
12. **Throttle Lever –** Controls the speed of the plate compactor. Place straight vertically to start, push fully counterclockwise for full throttle and fully clockwise to stop plate compactor.

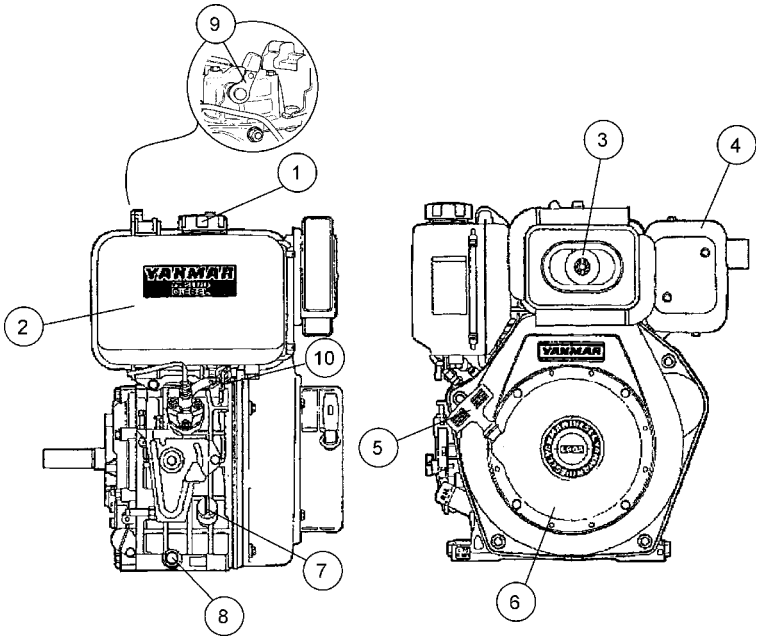

Figure 4. Engine Controls and Components

The engine shown above is a ***YANMAR L70V6*** engine (Figure 4). The engine must be checked for proper lubrication and filled with fuel prior to operation. Refer to the manufacturer's engine manual for instructions and details of operation and servicing. Each component is described below:

1. **Fuel Filler Cap –** Remove this cap to add unleaded gasoline to the fuel tank. Make sure cap is tightened securely. **DO NOT** over fill.
2. **Fuel Tank –** Capacity is 3.5 quarts (3.31 liters) of diesel fuel.
3. **Air Cleaner –** Prevents dirt and other debris from entering the fuel system. Remove wing-nut on top of air filter cannister to gain access to filter element.
4. **Muffler –** Used to reduce noise and emissions.
5. **Recoil Starting Handle (pull rope) –** Type of engine starting method.

CAUTION - Fueling The Engine

Adding fuel to the tank should be done only when the engine is stopped and has had an opportunity to cool down. In the event of a fuel spill, **DO NOT** attempt to start the engine untill the fuel residue has been completely wiped up, and the area surrounding the engine is dry.

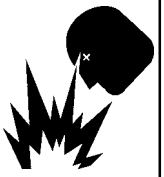

6. **Recoil Starter–** Manual-starting method. Pull the starter grip until resistance is felt, then pull briskly and smoothly.
7. **Oil Filler Cap / Dipstick –** Remove this cap to add oil to the engine crankcase. Read dipstick to determine if oil level is low. **DO NOT** over fill.

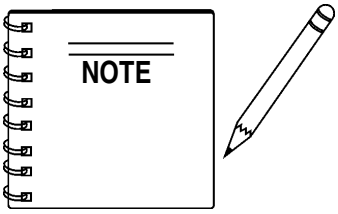

Operating the engine without an air filter, with a damaged air filter, or a filter in need of replacement will allow dirt to enter the engine, causing rapid engine wear.

8. **Oil Drain Plug –** Unscrew plug to drain oil from engine crankcase. Dispose of oil in a safe manner.
9. **Decompression Lever–** Press down before starting engine. To prevent damage to engine**, DO NOT** use for any other purpose.

CAUTION - Burn Hazard

Engine components can generate extreme heat. To prevent burns, **DO NOT** touch these areas while the engine is running or immediately after operating. **NEVER** operate the engine with the muffler removed.

10. **Fuel Cock–** Controls the flow of diesel fuel to the carburetor. Must be in the ON position when starting and running the engine.

CAUTION - General Safety Precautions

NEVER operate the compactor in a confined area or enclosed area structure that does not provide ample ***free flow of air***.

ALWAYS wear approved eye and hearing protection before operating the compactor.

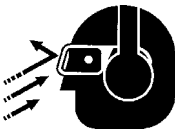

Before Starting:

1. Read safety instructions at the beginning of manual.
2. Remove dirt and dust, particularly in the engine cooling air inlet, carburetor and air cleaner.
3. Check the air filter for dirt and dust. If air filter is dirty, replace air filter with a new one as required.
4. Check carburetor for external dirt and dust. Clean with dry compressed air.
5. Check fastening nuts and bolts for tightness.

Engine Oil Check:

1. To check the engine oil level, place the compactor on secure level ground with the engine stopped.
2. Remove the filler dipstick from the engine oil filler hole (Figure 5) and wipe clean.

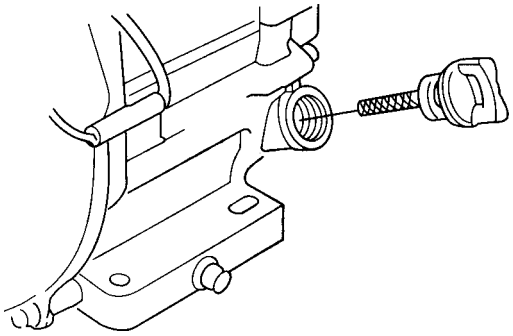

Figure 5. Engine Oil Dipstick (Removal)

3. Insert and remove the dipstick without screwing it into the filler neck. Check the oil level shown on the dipstick.
4. If the oil level is low (Figure 6), fill to the edge of the oil filler hole with the recommended oil type (Table 4). Maximum oil capacity is 1.16 quarts (1.1 liters).

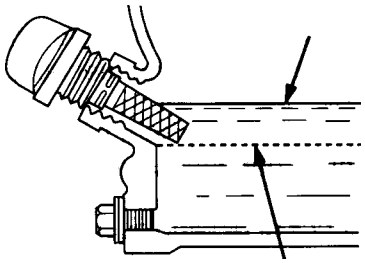

Figure 6. Engine Oil Dipstick (Oil Level)

Table 4. Oil Type

Season	Temperature	Oil Type
Summer	25°C or Higher	SAE 10W-30
Spring/Fall	25°C~10°C	SAE 10W-30/20
Winter	0°C or Lower	SAE 10W-10

WARNING - Explosive Fuel

Diesel is extremely flammable, and its vapors can cause an explosion if ignited. **DO NOT** start the engine near spilled fuel or combustible fluids. **DO NOT** smoke while refueling. **DO NOT** attempt to refuel the pump if the engine is ***hot!*** or ***running***.

Fuel Check:

1. Remove the diesel cap located on top of fuel tank.
2. Visually inspect to see if the fuel level is low. If fuel is low, replenish with unleaded fuel.
3. When refueling, be sure to use a strainer for filtration. **DO NOT** top-off fuel. Wipe up any spilled fuel ***immediately!***

This section is intended to assist the operator with the ***initial start-up*** of the compactor. It is extremely important that this section be read carefully before attempting to use the compactor in the field.

Starting the Engine (Yanmar engine):

1. Open the fuel cock (Figure 7).

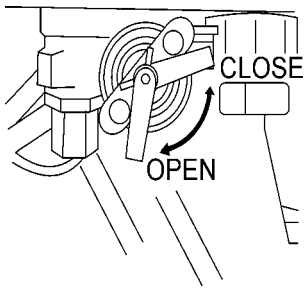

Figure 7. Fuel Cock

2. Move the throttle lever to the **START** position by opening it to about 20 degrees (Figure 8).

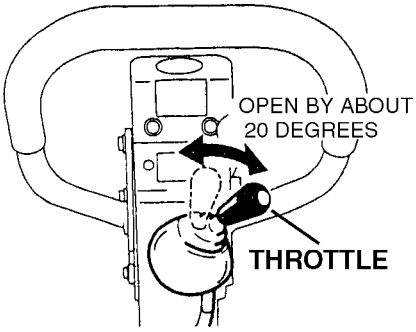

Figure 8. Throttle Lever (Start Position)

3. Grasp the starter grip (Figure 9) and slowly pull it out. The resistance becomes the hardest at a certain position, corresponding to the compression point. Pull the starter grip briskly and smoothly for starting.

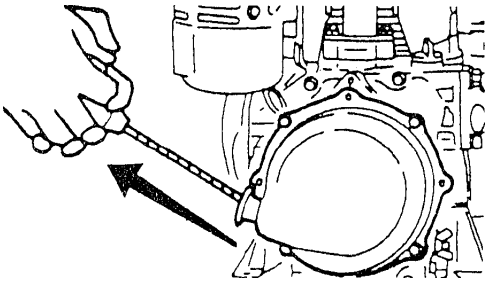

Figure 9. Starter Grip

4. Push down the decompression lever (Figure 10) and release.

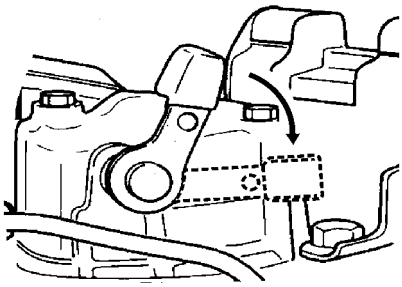

Figure 10. Decompression Lever

5. If the engine does not start, repeat steps 3 and 4.

Shut-Down Procedure:

1. Return the throttle lever to the **START** position. Allow the machine to cool down for 2 to 3 minutes.
2. Turn the ***throttle lever*** to the **STOP** position (Figure 11) to stop the engine.

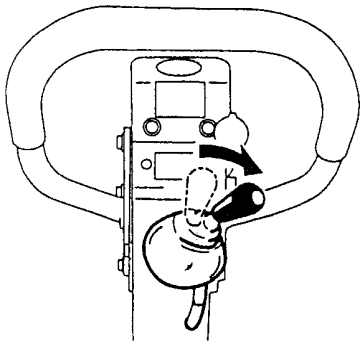

Figure 11. Throttle Lever (Stop)

3. Close the fuel cock (Figure 7).

Emergency Shutdown Procedure:

1. Move the throttle lever quickly to the **STOP** position (Figure 11).
2. Close the fuel cock.

Traveling:

1. Grasp the compactor's hand grip and move the throttle lever (Figure 12) quickly to the ***fast*** position. The compactor will not operate correctly until the engine speed is high enough to engage the centrifigal clutch (approximately 2300 RPMs).

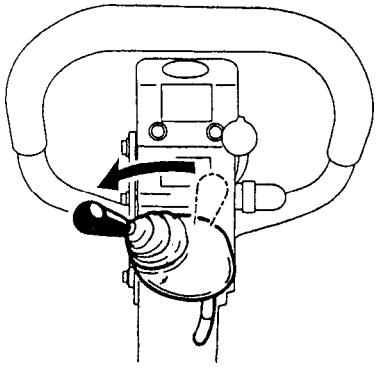

Figure 12. Throttle Lever (Fast)

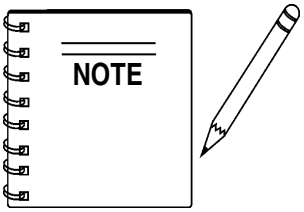

Always move the throttle lever quickly without hesitation, because increasing the engine speed slowly causes the clutch to slip.

2. To make the compactor travel forward, push the travel lever forward (Figure 13). To make the compactor travel backward, pull the travel lever back (Figure 13).

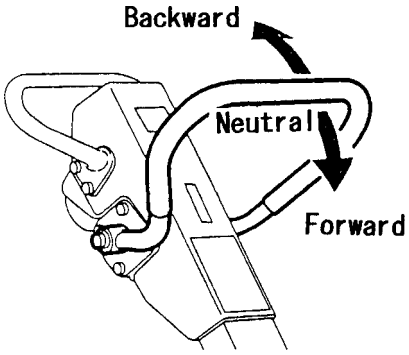

Figure 13. Travel Lever

5. Slowly walk behind the compactor and be on the lookout for any large objects or foreign matter that might cause damage to the compactor or bodily injury.
6. If travel lever is placed in the neutral position, the machine will vibrate in place.

To Turn The Compactor:

1. Move the ***travel lever*** to the **NEUTRAL** position.
2. Hold the hand grip firmly and turn the compactor in the desired direction. **DO NOT** swing compactor while gripping the travel lever.

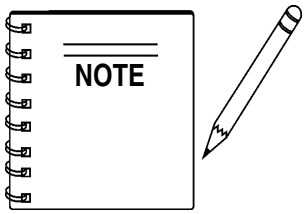

Whenever the compactor's vibration becomes weak or lost during normal operation, regardless of operation hours, check the V-belt and clutch immediately.

Adjusting Handle Height:

The height of the handle is adjustable for your comfort .

1. Loosen the butterfly screw (Figure 14).
2. Turn the grip clockwise to raise the handle or counterclockwise to lower the handle.
3. When the handle is raised to the desired height, tighten the butterfly screw.

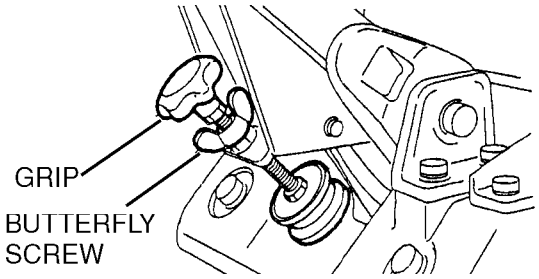

Figure 14. Handle Adjustment

Stowing the Handle:

1. Push up the handle (Figure 15).
2. Pull the stopper grip upward into the hole of the guard frame to lock the handle.

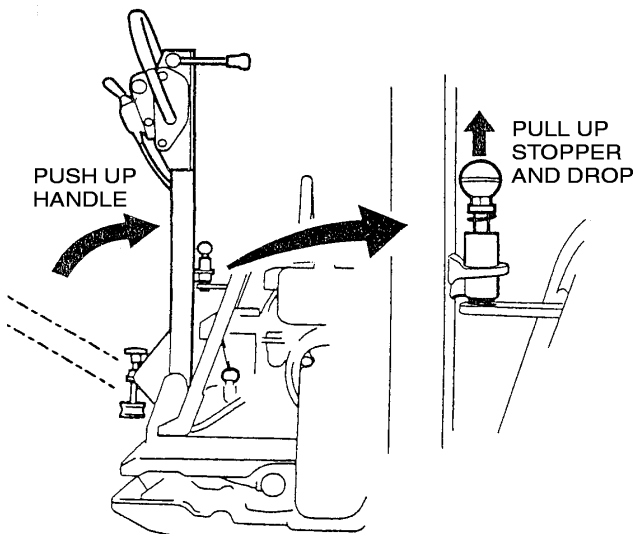

Figure 15. Stowing the Handle

Lifting:

1. Use a crane or lift to load and unload the machine. A skilled crane operator is required to perform the job.
2. When lifting the machine, check for any damaged or loose bolts, lifting hooks, and shock mounts.
3. Check any damaged or loose bolts in the guard frame to avoid machine sliding off.
4. Make sure that the machine is shut off before machine is lifted.
5. Use reliable cable for lifting.
6. Always lift the machine vertically and keep the machine away from workers and animals.
7. Do not lift the machine higher than the required height.

Transporting:

1. Always make sure that the machine is shut off while being transported.
2. Check that the fuel cap is properly closed and tightened.
3. When traveling long distances or on rugged terrain, drain the fuel of the machine before transporting.
4. Tie down the machine securely on the transportation so that it will not move or topple over.

CAUTION - General Maintenance Safety

Inspection and other services should ***always*** be carried out on hard and level ground with the engine shutdown.

Inspection and Maintenance Service Tables.

To make sure your plate compactor is always in good working condition before using, carry out the maintenance inspection in accordance with Tables 5 through 7.

TABLE 5. MVH-200DA2 MACHINE INSPECTION

ITEM	HOURS OF OPERATION	REMARKS
Loose or Missing Screws	Every 8 hours (every day)	
Damaged Parts	Every 8 hours (every day)	
Function of Controlling System Part	Every 8 hours (every day)	
Hydraulic System Leak	Every 100 hours	
Vibrator Oil Check	Every 100 hours	See page 21
Vibrator Oil Replacement	Every 300 hours	See page 21
Hydraulic Oil Check	Every 100 hours	See page 23
Hydraulic Oil Replacement	First after 200 hours, then every 1,000 hours	See page 23
V-belt (clutch) Check	Every 200 hours	See page 22

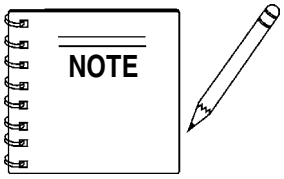

These inspection intervals are for operation under normal conditions. Adjust your inspection intervals based on the number hours plate compactor is in use, and particular working conditions. Fuel piping and connections should be replaced every 2 years.

TABLE 6. MVH-200DA2 ENGINE CHECK

ITEM	HOURS OF OPERATION
Spark Plug Check	Every 40 hours (every week)
Oil or Fuel Leak	Every 8 hours (every day)
Tightness of Fastening Threads	Every 8 hours (every day)
Engine Oil Check and Replenishment	Every 8 hours (every day) (Replenish to specified maximum level)
Engine Oil Replacement	After first 25 hours then every 50 to 100 hours
Air Filter Cleaning	Every 100 hours
See separate engine manual for details on engine check.	

Daily Service

- Check for leakage of fuel or oil.
- Check for loose screws including tightness. See Table 7 below (tightening torque), for retightening:

TABLE 7.

TIGHTENING TORQUE (in. kg/cm) Diameter

Material	6mm	8mm	10mm	12mm	14mm	16mm	18mm	20mm
4T	70	150	300	500	750	1,100	1,400	2,000
6-8T	100	250	500	800	1,300	2,000	2,700	3,800
11T	150	400	800	1,200	2,000	2,900	4,200	5,600
*	100	300~ 350	650 ~ 700					

* (In case counter-part is of aluminum)
(Threads in use with this machine are all right handed)
Material and quality of material is marked on each bolt, and screw.

- Remove soil and clean the bottom of compaction plate.
- Check hydraulic pump, piping and hose for any leakage. A loosened hydraulic hose can be a cause for leakage. Check hydraulic hose connections with wrench applied for tightness.
- Check engine oil.

Engine Oil Replacement:

1. Replace engine oil, first in 25 hours of operation and every 50 to 100 hours afterwards.
2. Drain the engine oil when the oil is ***warm*** as shown in Figure 16.

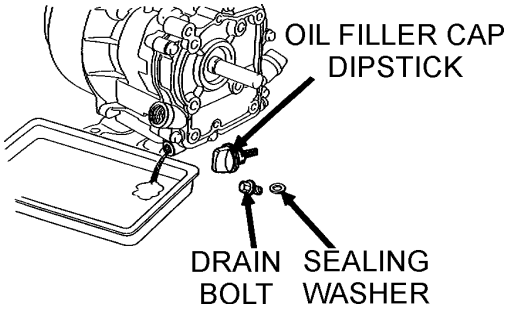

Figure 16. Engine Oil (Draining)

3. Remove the oil drain bolt and sealing washer and allow the oil to drain into a suitable container.
4. Replace engine oil in the oil tank with recommended type oil as listed in Table 4. Engine oil capacity is 1.16 quarts (1.1 liter). **DO NOT** overfill.
5. Install drain bolt with sealing washer and tighten securely.

Air Filter:

1. Remove the air cleaner cover and foam filter element as shown in Figure 17.
2. Tap the paper filter element (Figure 17) several times on a hard surface to remove dirt, or blow compressed air [not exceeding 30 psi (207 kPa, 2.1 kgf/cm^2)] through the filter element from the air cleaner case side.

⚠ CAUTION - Cleaning the Engine Air Filter

NEVER brush off dirt. Brushing will force dirt into the fibers and cause poor performance in your air filter. Replace the paper filter element if it is excessively dirty.

3. Clean foam element in warm, soapy water or nonflammable solvent. Rinse and dry thoroughly. Dip the element in clean engine oil and completely squeeze out the excess oil from the element before installing.

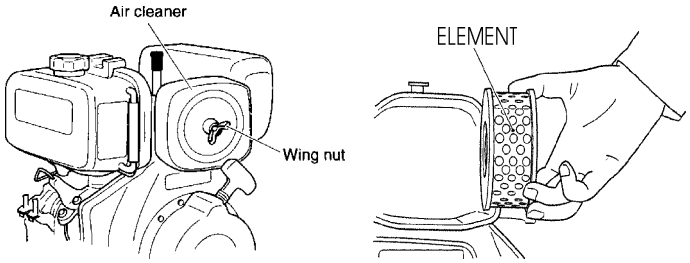

Figure 17. Engine Air Filter

Hydraulic Oil

1. Check hydraulic oil in every 100 hours of operation. With handle bar positioned vertically (storage position), remove oil level check plug (Figure 18) from the top of hydraulic pump and check for proper oil level.
2. Replace hydraulic oil after first 200 hours and in every 1,000 hours of operation.

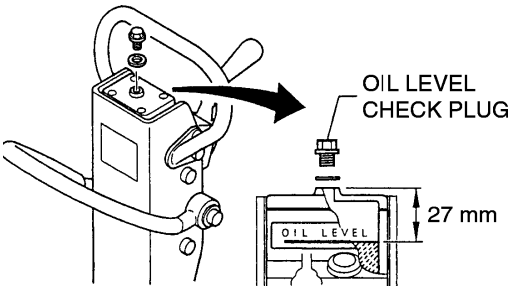

Figure 18. Oil Level Check Plug

Checking and Replacing the V-Belt and Clutch:

After 200 hours of operation, remove the belt cover to check the V-belt tension (Figure 19).

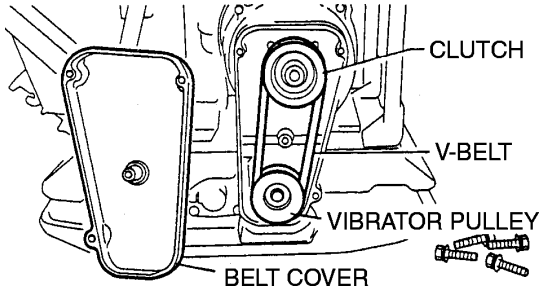

Figure 19. V-Belt Check

CAUTION - Checking and Replacing the V-Belt

NEVER attempt to check the V-belt with the engine running. Severe injury can occur if your hand gets caught between the V-belt and the clutch. Always use safety gloves.

Checking the V-belt

1. Tension is proper if the belt bends about 10 mm when depressed strongly with finger between shafts. Loose or worn V-belts reduces power transmission efficiency, causing weak compaction and reduces the life of the belt itself.

Replacing the V-belt

1. Remove the belt cover.
2. Engage an offset wrench (19 mm) or the like to vibrator pulley (lower) fastening bolt.
3. Engage waste cloth or the like at midway of V-belt on the left side and while pulling it back strongly, rotate the offset wrench clockwise so that the V-belt will come off.
4. Check the clutch and replace as necessary, following the procedures listed in ***Checking the Clutch***.
5. Engage V-belt to lower vibrator pulley and push the V-belt to the left side of the upper clutch and the rotate offset wrench clockwise so that the V-belt moves onto the pulley.

Checking the Clutch

1. With belt cover removed, visually check outer drum of the clutch for seizure and "V" groove for wear or damage.
2. Clean the "V" groove as necessary.
3. Check the clutch lining and shoe for signs of wear. If the shoe is worn, replace the clutch to prevent deficient power transmission and slippage.

Replacing the Clutch

1. Remove V-belt.
2. Remove bolt at engine power output by giving a shock to an engaged wrench (e.g. tapping with hammer) and rotate the bolt counterclockwise.
3. Remove clutch with a pulley extractor.
4. To install a new clutch, reverse steps 1-3.

Vibrator Oil Level Check

CAUTION - Checking and Replacing the V-Belt

Always clean the area around the vibrator oil level check hole before removing oil check plug. This will prevent dirt and debris from entering the system.

1. In every 100 hours of operation, with the machine positioned horizontally, remove vibrator oil level check plug (Figure 20) off vibrator (19 mm wrench) and see if oil is up to filler port. Be sure to clean area around check hole to prevent dirt and dust from entering.
2. In every 300 hours of operation, replace oil (capacity 1,500 cc). For draining oil through level check hole, have the machine inclined with a sleeper or the like placed under the compaction plate on opposite side.

   * Use engine oil 10W-30 for this lubrication.

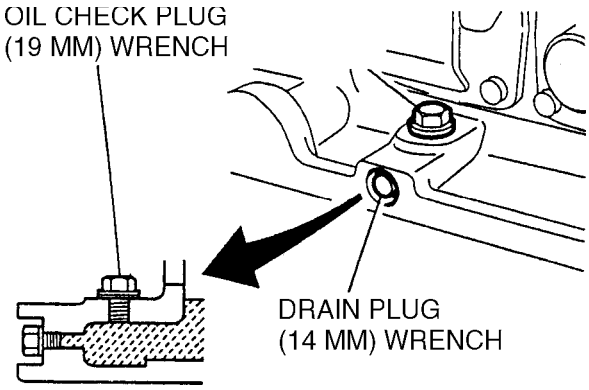

Figure 20. Vibrator Oil Maintenance

⚠ CAUTION - Filling the Hydraulic Oil Reservoir

Make sure hydraulic oil i is at a normal safe operating level. **DO NOT** over fill. Over filling (excessive oil) will cause excess oil to blow out of breather plug.

Replacing Hydraulic Oil

1. Remove the hydraulic hoses (left and right) which enters the cylinder of the vibrator from the hydraulic pump and move the travel lever back and forth to drain the hydraulic oil from the pump.
2. After draining, reinstall the hydraulic hoses and lock the travel lever to the sub-handle at reverse side (at **MAXIMUM** position), using a rope.
3. Remove the reservoir cover at the top of the pump (Figure 21). Remove the bleed valve assembly within the pump using a 17 mm box wrench.

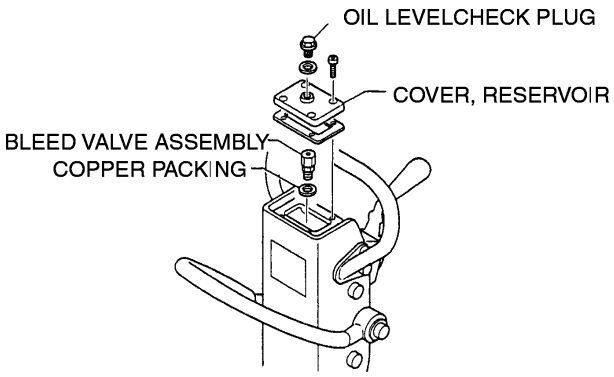

Figure 21. Hydraulic Oil Maintenance

⚠ CAUTION - Removing the Bleed Valve

When removing the bleed valve, **NEVER** loosen the M8 nut on its end. A copper packing is used underneath the bleed valve, therefore care should be taken not to drop it into the pump. Make sure to remove it together with the bleed valve. **DO NOT** allow dust or trash to enter the hand compactor.

4. Remove bleed plug at the cylinder of the vibrator (right belt cover side, forward travel circuit) (Figure 22). After a while, oil will flow out of the bleed plug. When aeration disappears, reinstall the plug, tightening it securely.

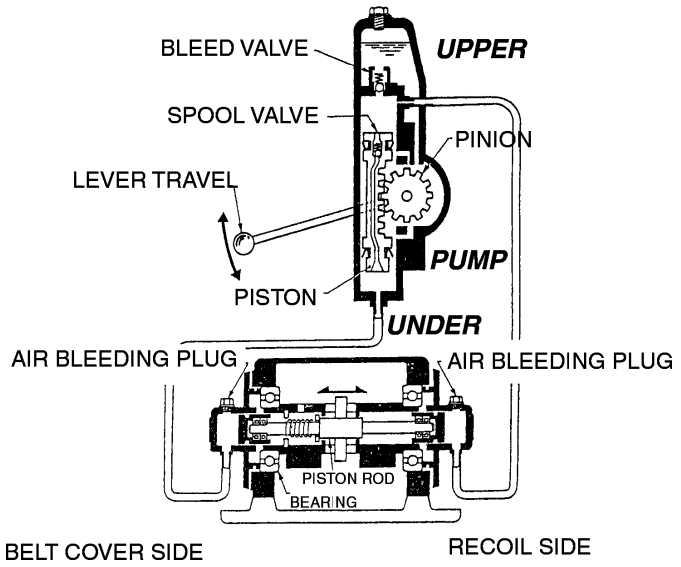

Figure 22. Hydraulic System

5. ***Filling the forward travel circuit with oil.***
   a. With the rope removed from the travel lever, move the lever slowly up and down while adding oil into the hand pump. Use Shell Tellus Oil #46 or equivalent.
   b. Moving it about 10 times causes the forward resistance to increase. When the resistance has considerably increased, with the travel lever remaining on the reverse side, install the bleed valve assembly loosely inside the pump to prevent oil splash.
   c. Push the travel lever forward all the way. The valve inside the spool will activate to push out the aerated oil reverse circuit.
   d. With the bleed valve assembly removed, repeat step c, two to three times.

6. ***Filling the reverse travel circuit with oil***.
   a. With the travel lever pushed forward (hydraulic circuit is connected with reverse travel circuit), add oil into pump and remove bleed plug of vibrator cylinder (opposite of belt cover side). In a few seconds, oil will come out of bleed plug.
   b. When aeration disappears, reinstall the plug tightly.
   c. Move the travel lever slowly until aeration in the hand pump disappears (about 10 to 15 times).
7. When the aeration in the pump disappears, with the travel lever pushed forward, reinstall the valve. Be careful not to drop the packing into pump. The bleeding valve tightening torque is 450 to 500 kg-gm.
8. After installing the bleed valve, moving the travel lever all the way to reverse causes excess oil to be discharged into pump. If valve fails to activate, aeration still remains in the circuit. With the bleed valve removed, operate travel lever again to bleed. If valve is activated, move the travel lever forward to activate the valve inside spool before moving it to reverse to activate the bleed valve. Repeat 3 to 4 times.
9. After making sure that the hydraulic oil in the pump is at the specified level, reinstall the reservoir cover. Coat both sides of packing with liquid packing (such as Threebond #1215).

CAUTION - Overfilling the Hydraulic Oil

Make sure that hand pump is filled with hydraulic oil to the specified level. Excessive oil may hinder bleed valve function, resulting in poor reverse performance.

10. After adding oil and reinstalling the reservoir cover, operate the travel lever to make sure of the following:
    a. *spool valve:* when pushed forward, resistance is felt in two-stage motion.

DANGER - Explosive Fuel

Diesel fuel is highly flammable and can be dangerous if mishandled. **DO NOT** smoke while refueling. **DO NOT** attempt to refuel the compactor if the engine is ***hot!*** or ***running***.

Checking The Fuel

1. Remove the fuel cap located on top of fuel tank.
2. Visually inspect to see if fuel level is low. If fuel is low, replenish with diesel fuel (Figure 23).
3. When refueling, be sure to use a strainer for filtration. **DO NOT** top-off fuel. Wipe up any spilled fuel.

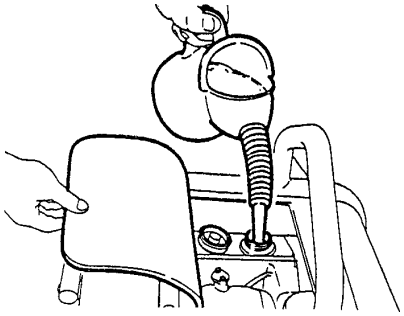

Figure 23. Refueling

DANGER - Explosive Fuel

Fuel spillage on a hot engine can cause a ***fire*** or ***explosion***. If fuel spillage occurs, wipe up the spilled fuel completely to prevent fire hazards. ***NEVER!*** smoke around or near the compactor.

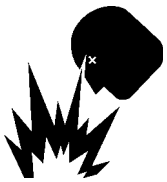

Practically all breakdowns can be prevented by proper handling and maintenance inspections, but in the event of a breakdown, please take remedial action following the diagnosis based on the Engine Troubleshooting Table (Table 8) information shown below and on the following page. If the problem cannot be remedied, please leave the unit as it is and consult Multiquip's business office or service plant.

TABLE 8. ENGINE TROUBLESHOOTING

SYMPTOM	POSSIBLE PROBLEM	SOLUTION
Engine will not start or start is delayed, although engine can be turned over.	Speed control lever is in "STOP" position?	Set speed control lever to "START" position.
	No fuel reaching injection pump?	Add fuel. Check entire fuel system.
	Defective fuel pump?	Replace fuel pump.
	Fuel filter clogged?	Replace fuel filter and clean tank.
	Faulty fuel supply line?	Replace or repair fuel line.
	Compression too low?	Check piston, cylinder and valves. Adjust or repair per engine repair manual.
	Fuel injector not working correctly?	Repair or replace injector in accordance with engine repair manual.
	Oil pressure too low?	Check engine oil pressure.
	Low starting temperature limit exceeded	Comply with cold starting instructions and proper oil viscosity.
At low temperatures engine will not start.	Fuel separates has inadequate resistance to low temperatures?	Check whether clear (not turbid) fuel emerges from the fuel line (detach from injection pump). If the fuel is turbid or separated, warm up the engine or drain the complete fuel supply system. Refuel with winter grade diesel fuel.
	Engine oil too thick?	Refill engine crankcase with correct type of oil for winter environment.
Engine fires but stops soon as starter is switched off.	Throttle lever in STOP position?	Reposition throttle lever to RUN position.
	Fuel filter blocked?	Replace fuel filter.
	Fuel supply blocked?	Check the entire fuel system.
Engine stops by itself during normal operation.	Fuel tank empty?	Add fuel.
	Fuel filter blocked?	Replace fuel filter.
Low engine power, output and speed.	Fuel tank empty?	Fill with No.2 diesel fuel.
	Fuel filter clogged?	Replace fuel filter.
	Fuel tank venting is inadequate?	Ensure that tank is adequately vented.
	Speed control lever does not remain in selected position?	See engine manual for corrective action.
	Engine oil level too full?	Correct engine oil level?
Low engine power output and low speed, black exhaust smoke.	Air filter blocked?	Clean or replace air filter.
	Incorrect valve clearances?	Adjust valves per engine specification.
	Malfunction at injector?	See engine manual.

Practically all breakdowns can be prevented by proper handling and maintenance inspections, but in the event of a breakdown, please take remedial action following the diagnosis based on the Compactor Troubleshooting Table (Table 9) information shown below. If the problem cannot be remedied, please leave the unit as it is and consult Multiquip's business office or service plant.

TABLE 9. PLATE COMPACTOR TROUBLESHOOTING

SYMPTOM	POSSIBLE CAUSE	SOLUTION
Travel speed too low, and vibration is weak.	Engine speed too low?	Set engine speed to correct RPM.
	Clutch slips?	Check or replace clutch.
	V-belt slips?	Adjust or replace V-belt.
	Excessive oil in vibrator?	Drain excess oil and fill to proper level.
	Malfunction in vibrator housing?	Check eccentric, gears and counter weights.
Travels forward or reverse, but impossible to switch direction.	Directional components defective?	Check all directional components
	Reversing lever adjustment?	Adjust or repair reversing lever.
	Hydraulic oil hose broken?	Repair or replace hydraulic oil hose.
	Aeration in hydraulic oil for reversing system?	Bleed hydraulic oil system.
	Check valve in hand pump clogged with dust?	Clean or replace hand pump check valve.
	Piston or bearing in cylinder (vibrator assy.) is defective?	If worn, replace cylinder piston or bearing.
Does not travel either forward or reverse.	V-belt slips?	Replace V-belt.
	Clutch slips?	Check clutch springs and shoes.
	Vibrator locked?	Check vibrator housing (eccentric, gears and counterweights)
	Piston or bearing in cylinder defective?	If worn, replace cylinder piston or bearing.
Travel lever operating resistance great.	Air in hydraulic line?	Bleed hrdraulic oil system.
	Piston or bearing in cylinder defective?	If worn, replace cylinder piston or bearing.

NOTE PAGE

MVH-200DA2— EXPLANATION OF CODE IN REMARKS COLUMN

The following section explains the different symbols and remarks used in the Parts section of this manual. Use the help numbers found on the back page of the manual if there are any questions.

The contents and part numbers listed in the parts section are subject to change ***without notice***. Multiquip does not guarantee the availibility of the parts listed.

Sample Parts List:

NO.	PART NO.	PART NAME	QTY.	REMARKS
1	12345	BOLT	1	INCLUDES ITEMS W/*
2*		WASHER, 1/4 IN.		NOT SOLD SEPARATELY
2*	12347	WASHER, 3/8 IN.	1	MQ-45T ONLY
3	12348	HOSE	A/R	MAKE LOCALLY
4	12349	BEARING	1	S/N 2345B AND ABOVE

NO. Column

Unique Symbols - All items with same unique symbol (*, #, +, %, or >) in the number column belong to the same assembly or kit, which is indicated by a note in the "Remarks" column.

Duplicate Item Numbers - Duplicate numbers indicate multiple part numbers are in effect for the same general item, such as different size saw blade guards in use or a part that has been updated on newer versions of the same machine.

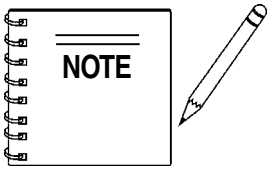

When ordering a part that has more than one item number listed, check the remarks column for help in determining the proper part to order.

PART NO. Column

Numbers Used - Part numbers can be indicated by a number, a blank entry, or TBD.

TBD (To Be Determined) is generally used to show a part that has not been assigned a formal part number at time of publication.

A blank entry generally indicates that the item is not sold separately or is not sold by Multiquip. Other entries will be clarified in the "Remarks" Column.

QTY. Column

Numbers Used - Item quantity can be indicated by a number, a blank entry, or A/R.

A/R (As Required) is generally used for hoses or other parts that are sold in bulk and cut to length.

A blank entry generally indicates that the item is not sold separately. Other entries will be clarified in the "Remarks" Column.

REMARKS Column

Some of the most common notes found in the "Remarks" Column are listed below. Other additional notes needed to describe the item can also be shown.

Assembly/Kit - All items on the parts list with the same unique symbol will be included when this item is purchased.

Indicated by:
"INCLUDES ITEMS W/(unique symbol)"

Serial Number Break - Used to list an effective serial number range where a particular part is used.

Indicated by:
"S/N XXXXX AND BELOW"
"S/N XXXX AND ABOVE"
"S/N XXXX TO S/N XXX"

Specific Model Number Use - Indicates that the part is used only with the specific model number or model number variant listed. It can also be used to show a part is NOT used on a specific model or model number variant.

Indicated by:
"XXXXX ONLY"
"NOT USED ON XXXX"

"Make/Obtain Locally" - Indicates that the part can be purchased at any hardware shop or made out of available items. Examples include battery cables, shims, and certain washers and nuts.

"Not Sold Separately" - Indicates that an item cannot be purchased as a separate item and is either part of an assembly/kit that can be purchased, or is not available for sale through Multiquip.

MQ MIKASA MVH-200DA2
1 to 3 Units
W/YANMAR L70V6 ENGINE

Qty.	P/N	Description
3	070200323	V-BELTS
2	956100038	THROTTLE WIRE
3	11465012591	ELEMENT, A/C
1	11428855041	CAP, FUEL TANK
1	11487076630	ROPE, RECOIL STARTER
2	11425035110	STRAINER, OIL LUB W/ O-RING
2	11425055121	FILTER, FUEL OIL
1	11425055100	FILTER, FUEL STRAINER

BODY ASSY.

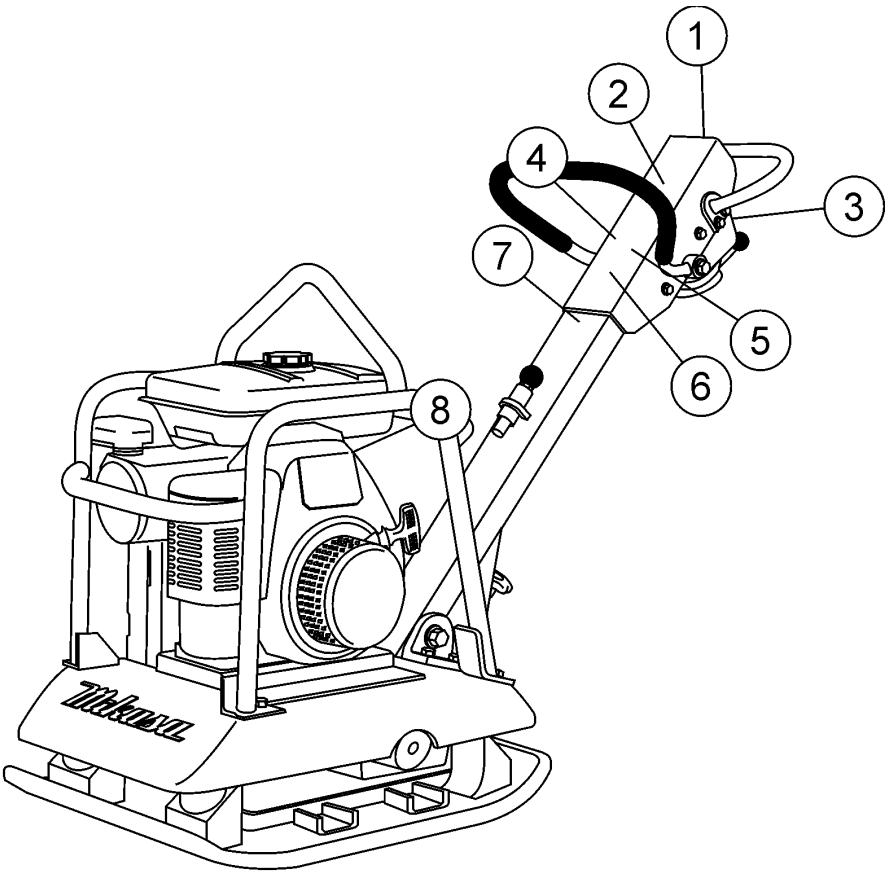

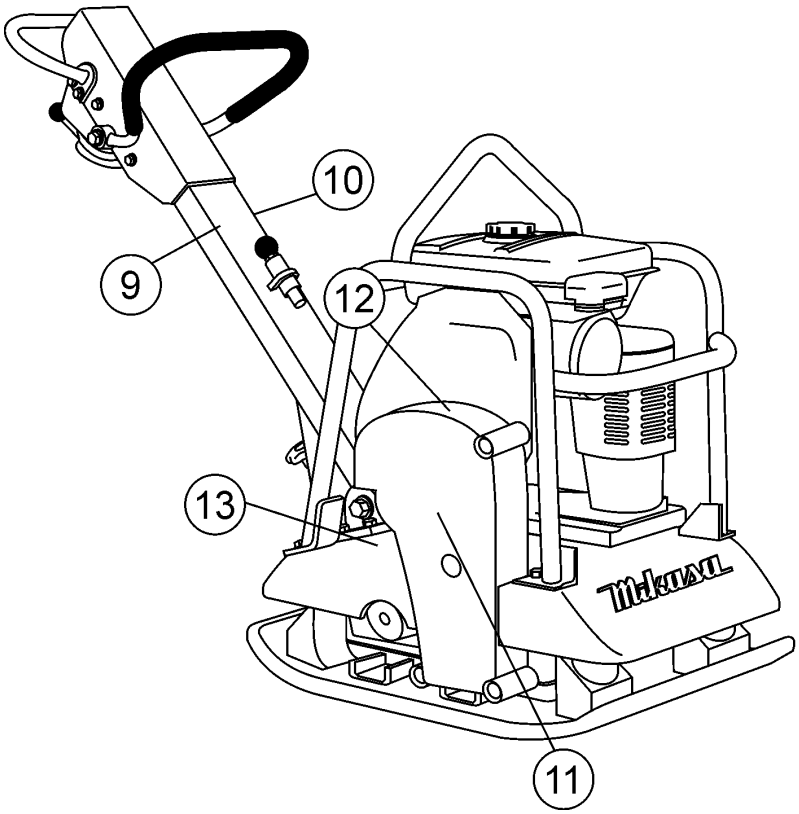

BODY ASSY.

NO.	PART NO.	PART NAME	QTY.	REMARKS
1	920203260	DECAL, OIL TANK	1	
2	920204230	DECAL, TRAVEL LEVER OP.	1	
3	920203330	DECAL, EAR PROTECTION	1	
4	920202220	DECAL, FORWARD/REVERSE	1	
5	920204580	DECAL, FULL THROTTLE	1	
6	920204040	DECAL, LIFTING CAUTION	1	
7	920203290	DECAL, CAUTION OPERATION	1	
8	920203560	DECAL, ENGINE MAX SPEED	1	
9	920206280	DECAL, PINCH POINT DANGER	1	
10	920206290	DECAL, READ MANUAL CAUTION	1	
11	TBD	DECAL, MULTIQUIP	1	
12	920206880	DECAL, V-BELT	1	
13		PLATE, SERIAL NO.	1	CONTACT PARTS DEPARTMENT

BODY ASSY.

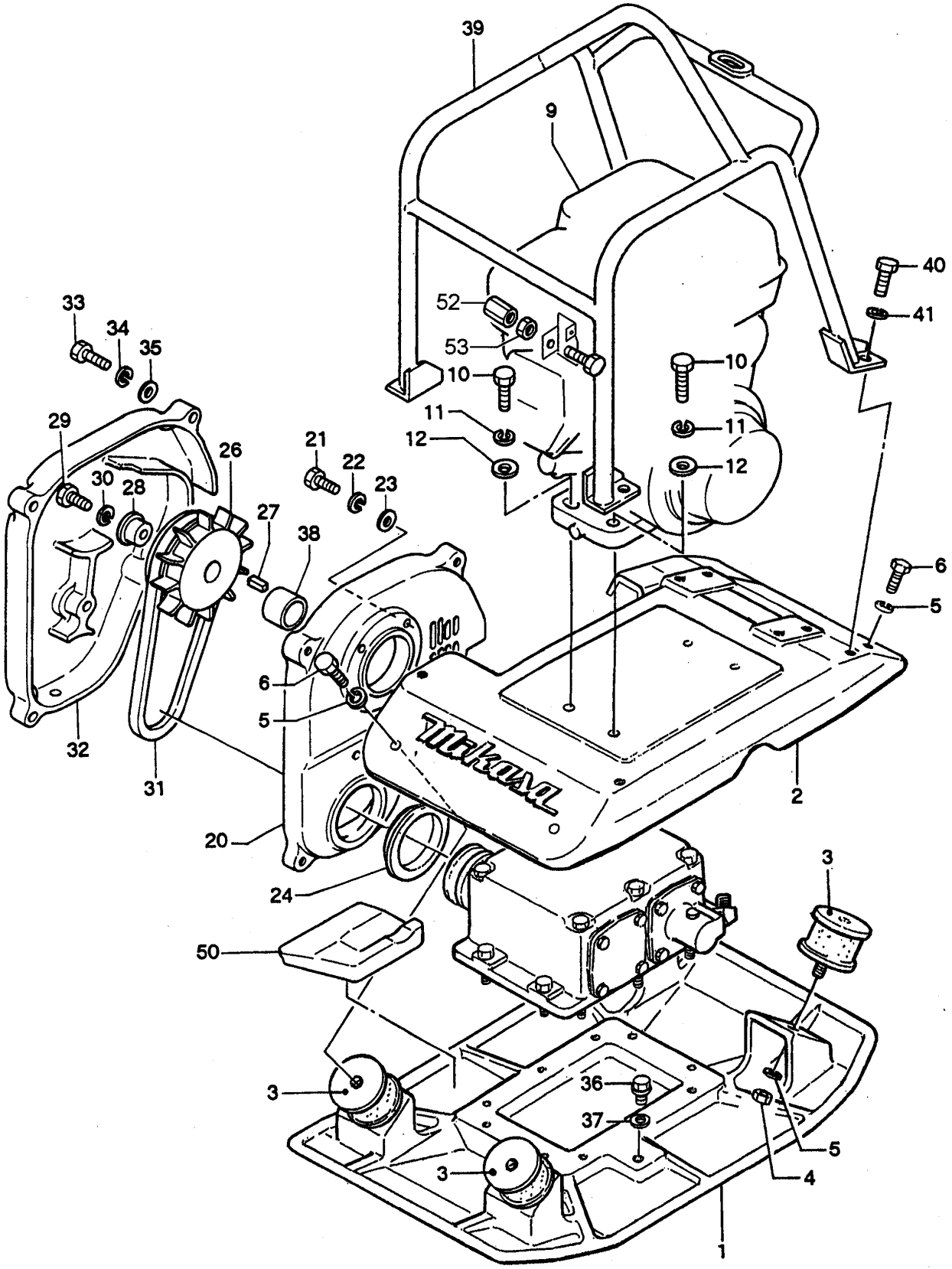
39
9
40
41
52
53
10
10
11
11
12
12
33
34
35
29
30
28
26
21
22
23
27
38
6
5
6
5
32
31
20
24
2
3
50
3
3
36
37
5
4
1

BODY ASSY.

NO	PART NO	PART NAME	QTY.	REMARKS
1	455109250	VIBRATING PLATE	1	
2	455116690	BASE	1	
3	939010050	SHOCK ABSORBER 75	4	
4	020312100	NUT M12	4	
5	030212300	WASHER, LOCK M12	8	
6	001221240	BOLT 12 X 40 T	4	
9	914410026	ENGINE ASSY. L70V6GJ1R1AAS5	1	
10	001221040	BOLT 10 X 40 T	4	
11	030210250	WASHER, LOCK M10	4	
12	031110160	WASHER, FLAT M10	4	
20	455113800	BELT COVER, IN	1	
21	001220830	BOLT 8 X 30 T	4	
22	030208200	WASHER, LOCK M8	4	
23	031108160	WASHER, FLAT M8	4	
24	455434940	COVER SEAL	1	
26	456343340	CLUTCH ASSY. W/ COVER	1	
27	951406790	KEY7X7X36	1	
28	455445510	WASHER	1	
29	001220835	BOLT 8X35 T	1	
30	030208200	WASHER, LOCK M8	1	
31	070200323	V-BELT B-32 BLUE/HDPF532	1	
32	455113750	BELT COVER	1	
33	001220852	BOLT 8X60 T	5	
34	030208200	WASHER, LOCK M8	5	
35	031108160	WASHER, FLAT M8	5	
36	953405270	PLUG 1/4X14 13L	1	
37	953405260	PACKING 1/4, CU	1	
38	455455570	CLUTCH SPACER	1	
39	455116700	GUARD FRAME	1	
40	001221230	BOLT 12X30 T	4	
41	030212300	WASHER, LOCK M12	4	
50	455215250	COVER GUARD	1	
52	959406800	NUT M6	1	
53	020306050	NUT M6	1	

VIBRATION ASSY.

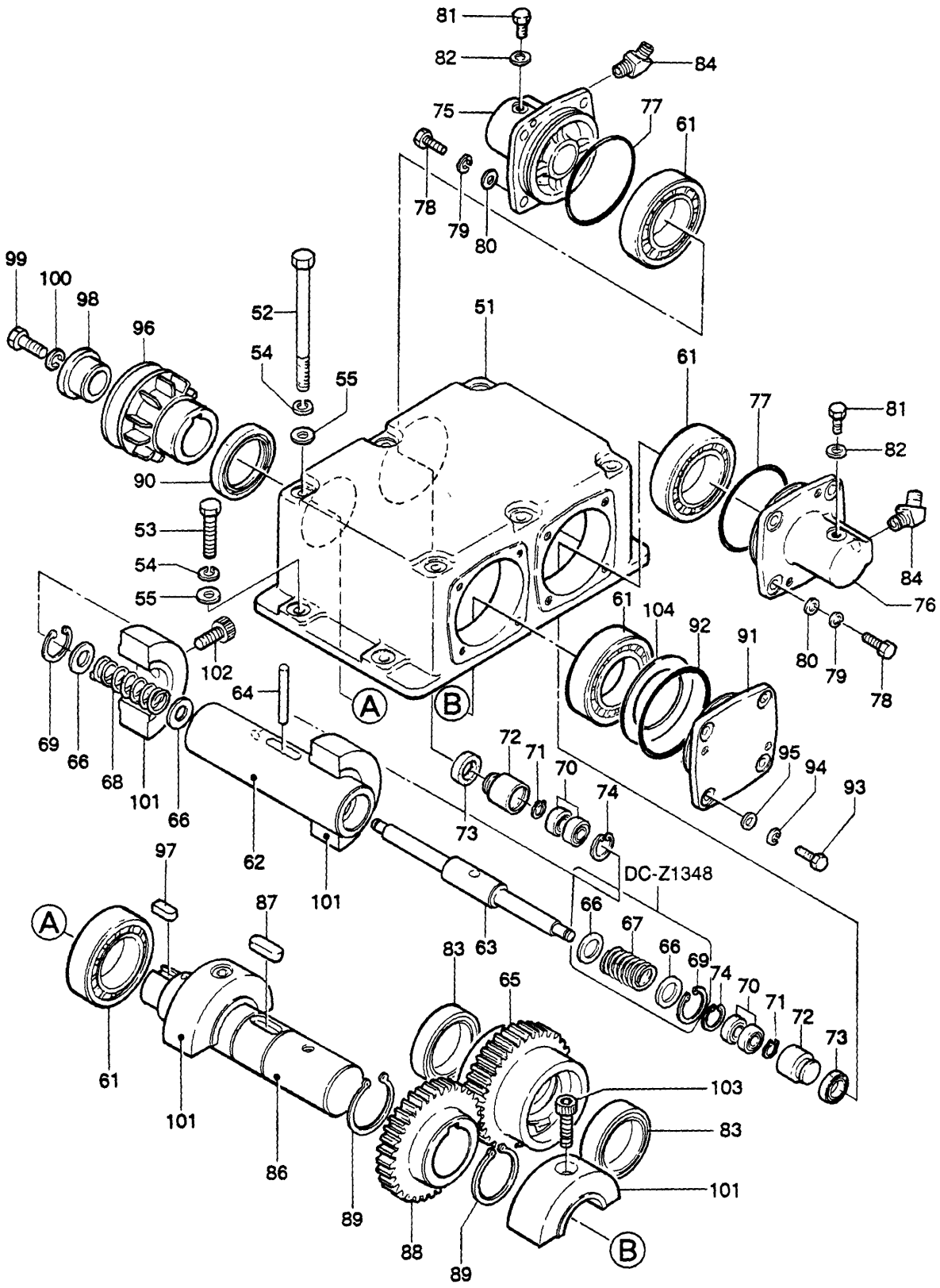

VIBRATION ASSY.

NO	PART NO	PART NAME	QTY.	REMARKS
51	455109310	VIBRATING CASE	1	
52	001221268	BOLT 12X140 T	6	
53	001221240	BOLT 12X40 T	4	
54	030212300	WASHER, LOCK M12	10	
55	031112230	WASHER, FLAT M12	10	
61	047920050	ROLLER BEARING NJ210MC4	4	
62	455324830	ROTARY SHAFT, DRIVEN	1	
63	455324840	PISTON ROD	1	
64	025510063	KNOCK PIN 10X63	1	
65	455324850	GEAR, DRIVEN	1	
66	455435020	COLLAR 17X30X3	2	
67	455435030	SPRING 28.2D-41L	1	
68	455435040	SPRING 27.3D-79L	1	
69	080100300	STOP RING R-30	1	
70	041006000	BEARING 6000Z	4	
71	080200100	STOP RING S-10	2	
72	455435051	PISTON, 22.4D	2	
73	455010070	PACKING USH-22.4 X 30 X 5	2	
74	080100260	STOP RING R-26	2	
75	455324860	CYLINDER, R	1	
76	455326060	CYLINDER, L	1	
77	050100850	O-RING G-85	2	
73	455010010	PACKING UPH-20308	2	
73	455010070	PACKING USH-22.4 X 30 X 5	2	
74	080100260	STOP RING R-26	2	
75	455324860	CYLINDER, R	1	
76	455326060	CYLINDER, L	1	
77	050100850	O-RING G-85	2	
78	001220825	BOLT 8 X 25 T	8	
79	030208200	WASHER, LOCK M8	8	
80	031108160	WASHER, FLAT M8	8	
81	001200810	BOLT 8 X 10	2	
82	953404600	COPPER PACKING 8 X 16 X 2	2	
83	040006910	BEARING 6910	2	
84	455010020	ELBOW 45' 15-0404	2	
95	031108160	WASHER, FLAT M8	4	

VIBRATION ASSY. (CONT.)

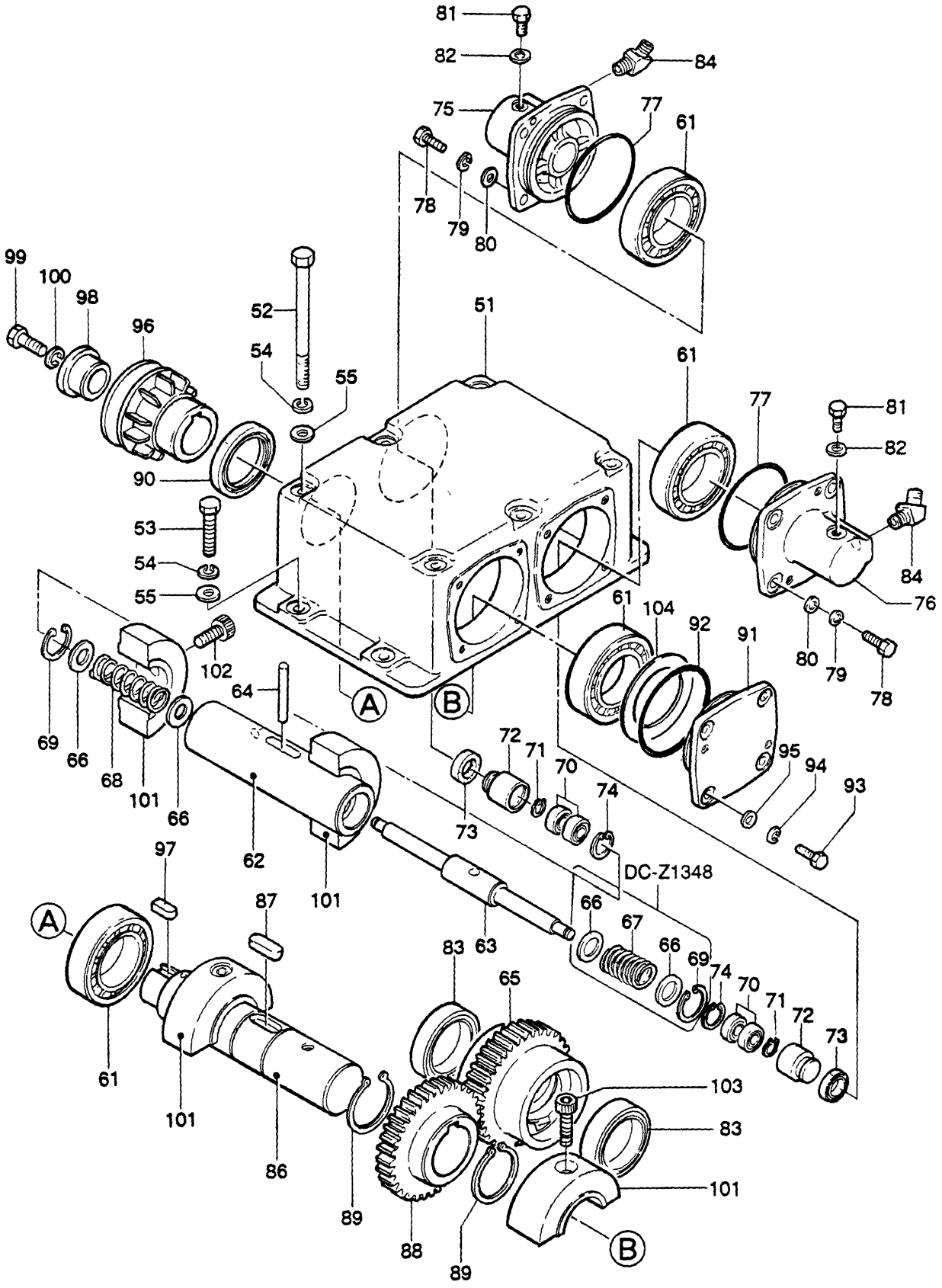

VIBRATION ASSY. (CONT.)

NO	PART NO	PART NAME	QTY.	REMARKS
86	455331070	ROTARY SHAFT, DRIVE	1	
87	951405370	KEY 15 X 10 X 39 RR	1	
88	455324880	GEAR, DRIVE	1	
89	080200500	STOP RING S-50	2	
90	060105030	OIL SEAL SB-50729	1	
91	455324890	BEARING COVER	1	
92	050100850	O-RING G-85	1	
93	001220825	BOLT 8 X 25 T	4	
94	030208200	WASHER, LOCK M8	4	
96	455335560	PULLEY, B1 W/FAN	1	
97	951403090	KEY 12 X 8 X 26	1	
98	455448970	WASHER, PULLEY	1	
99	001221230	BOLT 12 X 30 T	1	
100	030212300	WASHER, LOCK M12	1	
101	455324910	ECCENTRIC ROTOR	4	
102	001521225	SOCKET HEAD BOLT 12 X 25 T	2	
103	001521240	SOCKET HEAD BOLT 12 X 40 T	2	
104	952405480	SHIM 70 X 90 X 0.5	AR	

CONTROL (A-TYPE) ASSY.

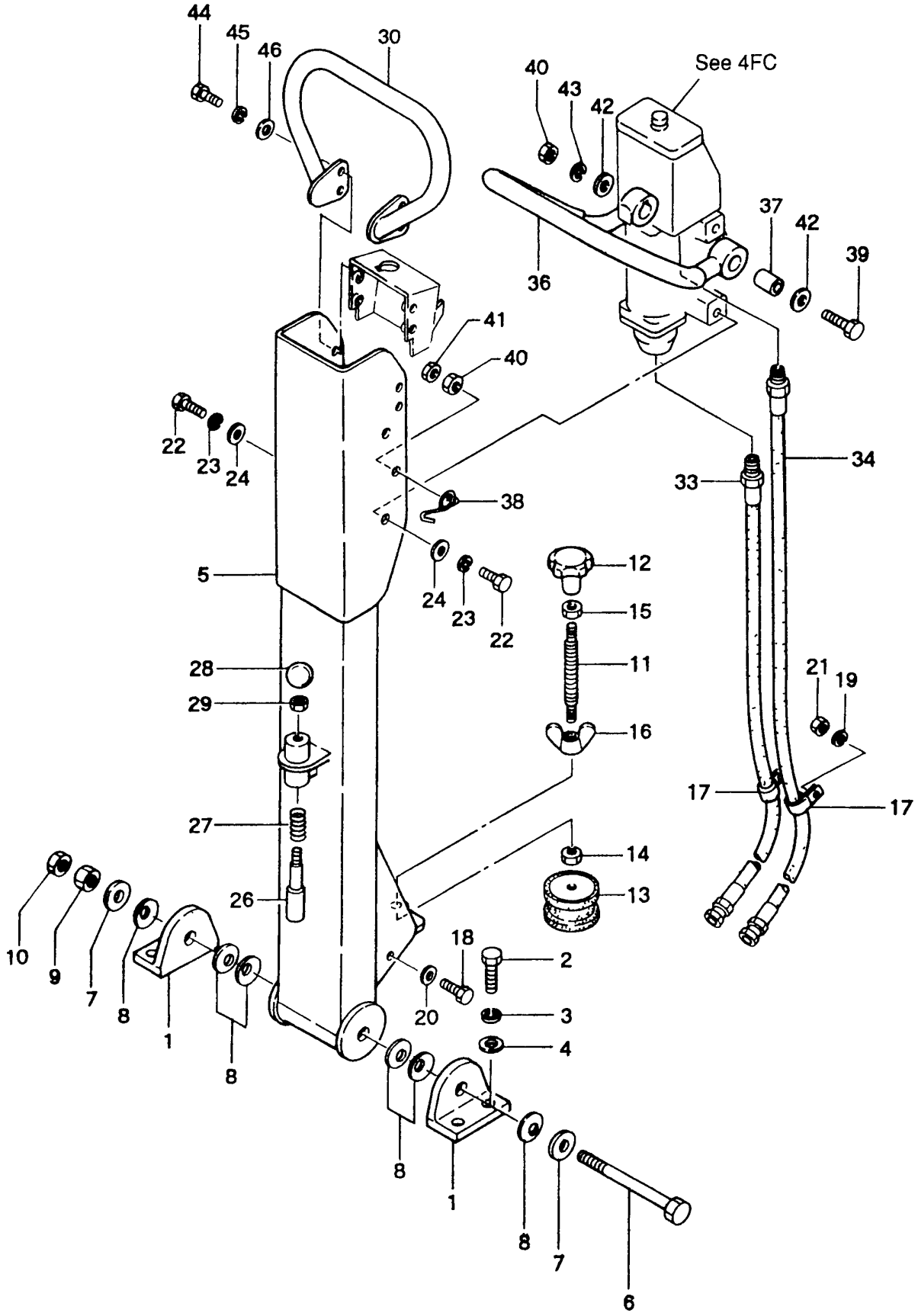

CONTROL (A-TYPE) ASSY.

NO	PART NO	PART NAME	QTY.	REMARKS
1	456329060	HANDLE BRACKET	2	
2	001221235	BOLT 12X35 T	4	
3	030212300	WASHER, LOCK M12	4	
4	031112230	WASHER, FLAT M12	4	
5	456111340	HANDLE	1	
6	001221676	BOLT 16X180 T	1	
7	031116260	WASHER, FLAT M16	2	
8	032116280	CONICAL SPRING WASHER M16	6	
9	020316130	NUT M16	1	
10	023041600	NUT M16, H=10	1	
11	455434950	SPINDLE	1	
12	455010030	KNOB	1	
13	939010060	SHOCK ABSORBER 60	1	
14	020410060	NUT M10, H=6	1	
15	020412070	NUT M12, H=7	1	
16	022411635	WING NUT M16	1	
17	954404230	CLAMP SA120-18	2	
18	001220620	BOLT 6X20 T	2	
19	030206150	WASHER, LOCK M6	2	
20	031106100	WASHER, FLAT M6	2	
21	020306050	NUT M6	2	
22	001220820	BOLT 8X20 T	4	
23	030208200	WASHER, LOCK M8	4	
24	031108160	WASHER, FLAT M8	4	
26	501402870	HANDLE STOPPER/MDR	1	
27	501402880	SPRING/HANDLE, 1.4X18 X44	1	
28	959403460	BALL GRIP 32D-M10	1	
29	020410060	NUT M10, H=6	1	
30	456211280	HANDLE GRIP	1	
33	455010040	OIL HOSE 950L	1	
34	455329500	OIL HOSE 1180L	1	
36	456111180	LEVER, TRAVEL	1	
37	456442320	COLLAR 12X15. 6X32L	1	
38	456442150	RETURN SPRING, LEVER	1	
39	001221252	BOLT 12X60 T	1	
40	020312100	NUT M12	2	
41	020412070	NUT M12, H=7	1	
42	031112230	WASHER, FLAT M12	2	
43	030212300	WASHER, FLAT M12	1	
44	001220830	BOLT 8X30 T	4	
45	030208200	WASHER, LOCK M8	4	
46	031108160	WASHER, FLAT M8	4	

PUMP (A-TYPE) ASSY.

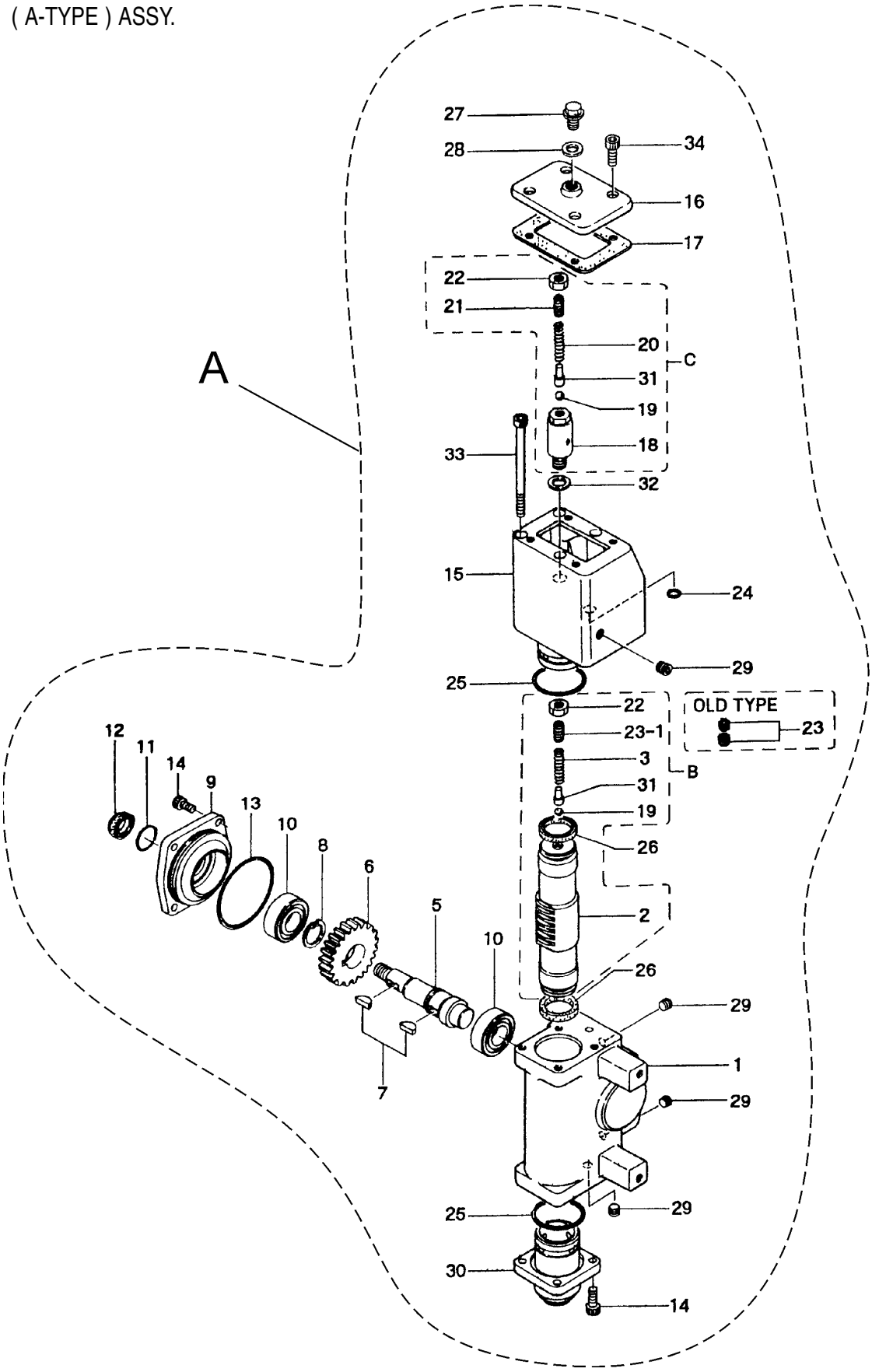

PUMP (A-TYPE) ASSY.

NO	PART NO	PART NAME	QTY.	REMARKS
A	456910020	PUMP ASSY.	1	INCLUDES ITEMS W/ *
B*	456910030	SPOOL ASSY.	1	INCLUDES ITEMS W/ $
C*	456910040	BLED VALVE ASSY.	1	INCLUDES ITEMS W/ #
1*	456111150	BODY	1	
2$*	456328870	SPOOL	1	
3$*	456442310	SPRING 1.0-5.1-35L	1	
5*	456329000	SHAFT	1	
6*	456441750	PINION	1	
7*	455437130	WOODRUFF KEY	2	
8*	080200240	STOP RING S-24	1	
9*	455326790	COVER, PINION	1	
10*	040006004	BEARING 6004	2	
11*	050200200	O-RING 9-20	1	
12*	455010120	DUST SEAL SER-20	1	
13*	050100650	O-RING G-65	1	
14*	001520615	SOCKET HEAD BOLT 6X15 T	8	
15*	456211220	RESERVE TANK	1	
16*	456441520	COVER, RESERVE TANK	1	
17*	456441490	PACKING, RESERVE TANK	1	
18#*	456441590	BLED VALVE	1	
19*#$	456441530	STEEL BALL 6.35D	2	
20#*	456441550	SPRING 0.9-5. 1-35L	1	
21#*	096208016	SOCKET HEAD SCREW 8X16 T	1	
22*#$	020408050	NUT M8, H=5	1	
22*#$	020408050	NUT M8, H=5	2	
23*	456441650	SET SCREW PT 1/8	2	
23-1*$	456443080	SET BOLT, SPOOL	1	
24*	050200090	O-RING P-9	1	
25*	050100450	O-RING G-45	2	
26*	456010020	PACKING SKY-25	2	
27*	953405270	PLUG 1/4X14 13L	1	
28*	953400160	PACKING 1/4	1	
29*	506010160	SOCKET HEAD PLUG 1/8	4	
30*	456328850	CYLINDER COVER, F	1	
31*#$	456441740	BALL SEAT	2	
32*	953405260	PACKING 1/4, CU	1	
33*	001520660	SOCKET HEAD BOLT 6X100 T	4	
34*	001520615	SOCKET HEAD BOLT 6X15 T	4	

THROTTLE (A-TYPE) ASSY.

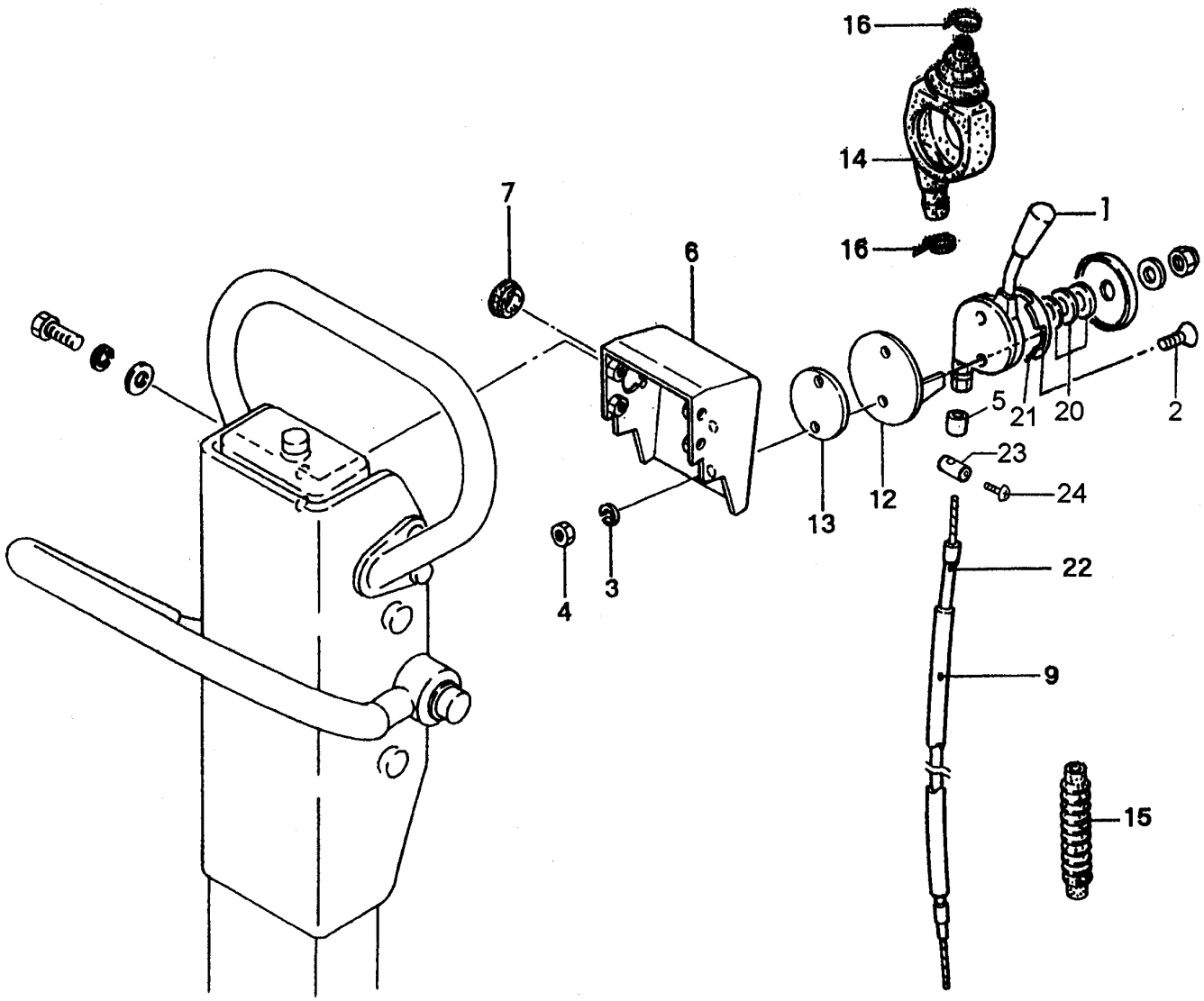

THROTTLE (A-TYPE) ASSY.

NO	PART NO	PART NAME	QTY.	REMARKS
1	956200010	THROTTLE LEVER ASSY. 103F/SX	1	
2	092008016	SCREW 8 X 16	2	
2	092008025	SCREW 8 X 25	2	
3	030208200	WASHER, LOCK 8MM	2	
4	020108060	NUT M8	2	
5	455435000	SPACER 7 X 9.5 X15	1	
6	456331120	LEVER BRACKET, T	1	
7	959404390	GROMMET MG-22D	1	
9	959021621	TUBE8-13-1300L	1	
12	456443060	LEVER STOPPER 462COS	1	
13	456443070	LEVER SPACE 515D04	1	
14	456330100	LEVER COVER	1	
15	959405280	BOOT	1	
16	506010070	CLAMP TC-150	2	
20	952010030	WAVE WASHER W-20	3	
21	455334250	WIRE GUIDE, AL103F	1	
22	956100038	THROTTLE WIRE 1550-1740	1	
23	359406810	WIRE STOPPER AY (3D)	1	
24	091004006	SCREW 4 X 6	1	

CYLINDER BLOCK ASSY.

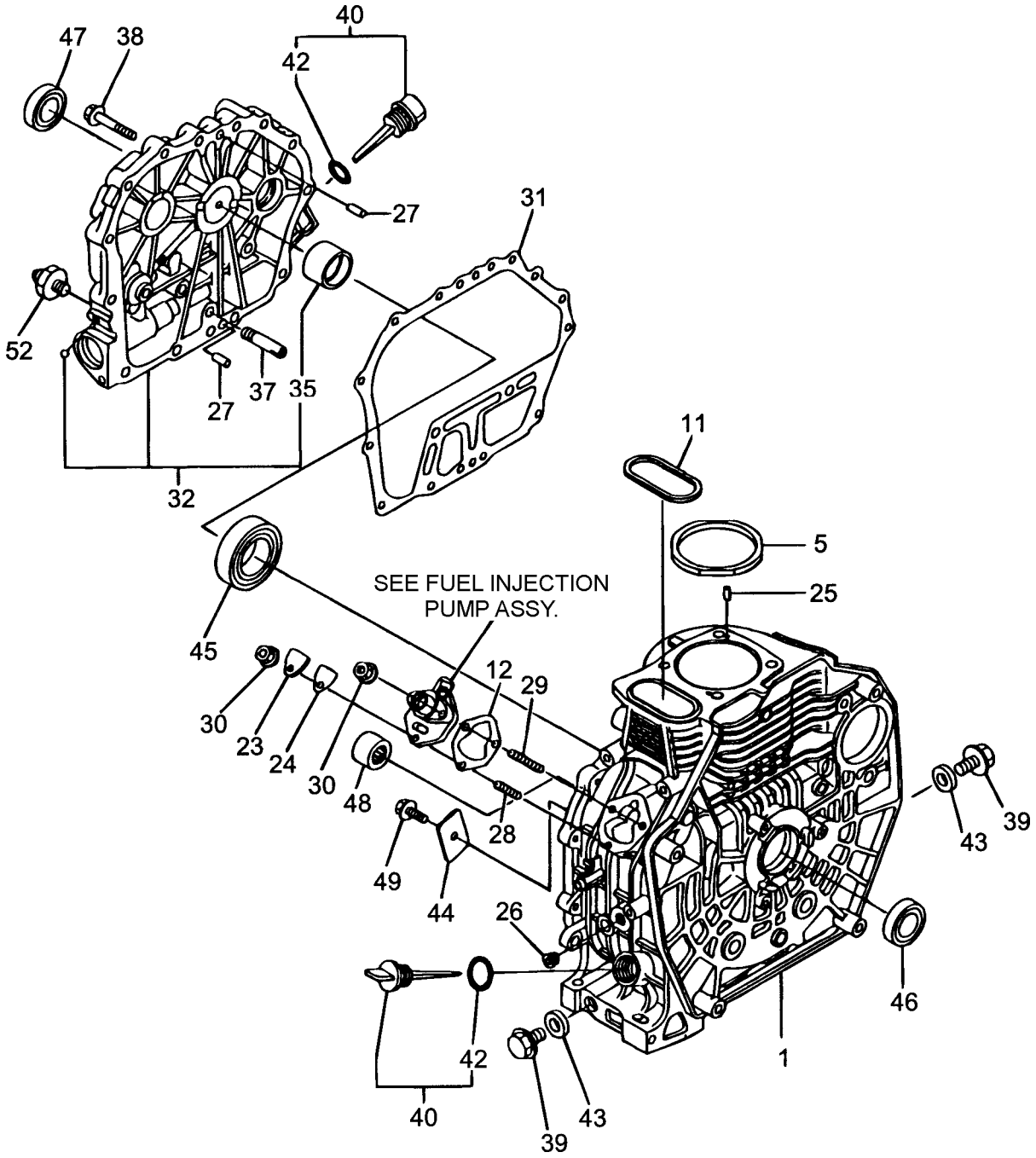

CYLINDER BLOCK ASSY.

NO.	PART NO.	PART NAME	QTY.	REMARKS
1	11421001010	CYLINDER BLOCK ASSY.	1	
5	11439501330	CYLINDER HEAD GASKET ASSY.	1	
11	11439901380	O- RING	1	
12	11429901800	SHIM SET	1	
23	11429901830	COVER (FO PUMP)	1	
24	11425001841	GASKET	1	
25	22312040080	PIN 4X8 STRAIGHT	2	
26	23875020000	PLUG PT1/4 STEEL	1	
27	11429901600	PIN, 8X12	2	
28	26226060182	STUD M 6X18 PLATED	1	
29	26226060222	STUD M 6X22 PLATED	2	
30	26366060002	NUT M6	3	
31	11439901410	CRANKCASE GASKET	1	
32	11421001460	CRANKCASE COVER D	1	
35	11435002100	MAIN BEARING US=STD.	1	
35	11435002200	MAIN BEARING US=0.25	1	
35	11435002210	MAIN BEARING US=0.50	1	
37	11429935150	L.O. INLET PIPE	1	
38	26106080352	BOLT M 8X35 PLATED	15	
39	11429901690	PLUG M16	2	
40	11469901760	OIL GAUGE CAP, W/LUB	2	
42	11429901950	O- RING	2	
43	22190160002	SEAL WASHER 16S	2	
44	11429902030	RETAINER	1	
45	11435002113	BALL BEARING	1	
46	16011002220	OIL SEAL	1	
47	16011002220	OIL SEAL	1	
48	24162152116	NEEDLE BEARING	1	
49	26106080122	BOLT M 8X12 PLATED	1	
52	12125239450	OIL PRESSURE SENDER	1	

CYLINDER HEAD ASSY.

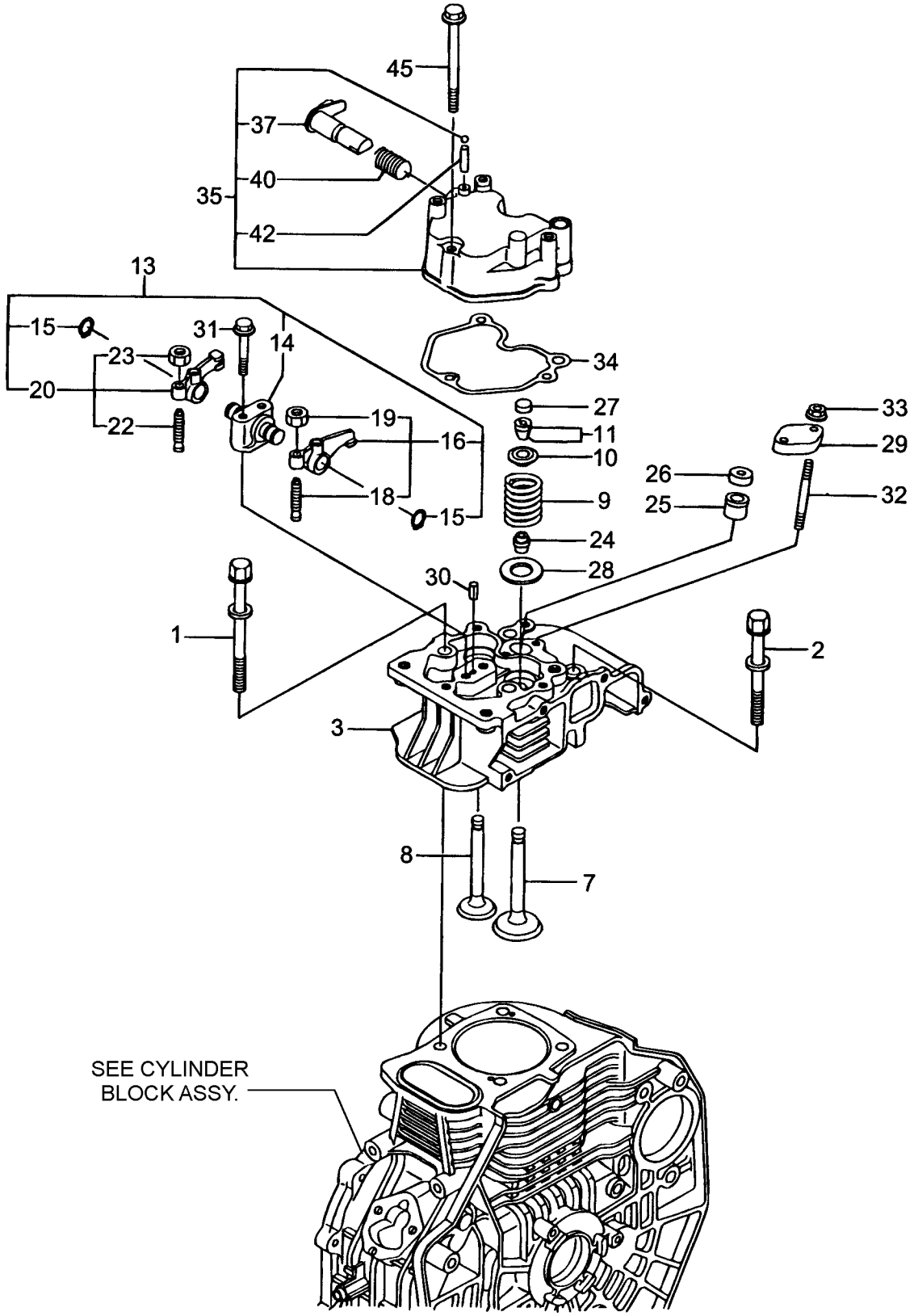

CYLINDER HEAD ASSY.

NO.	PART NO.	PART NAME	QTY.	REMARKS
1	11421001200	CYLINDER HEAD A BOLT	2	
2	11421001210	CYLINDER HEAD B BOLT	2	
3	11421011020	CYLINDER HEAD ASSY.	1	
7	11421011100	INTAKE VALVE	1	
8	11421011110	EXHAUST VALVE	1	
9	11421011120	VALVE SPRING	2	
10	11421011180	SPRING RETAINER	2	
11	11421011930	COTTER ASSY.	2	
13	11421011250	SUPPORT ASSY. ROCKER	1	..... INCLUDES ITEMS W/#
14#	11421011260	ROCKER ARM SUPPORT	1	
15#	11421011280	C TYPE RETAINING PIN	2	
16#	11421011650	INTAKE ARM ASSY.	1	
18	11429911240	ADJUSTING SCREW	1	
19	26856060002	LOCK NUT 6	1	
20#	11421011660	EXHAUST ARM ASSY.	1	
22	11429911240	ADJUSTING SCREW	1	
23	26856060002	LOCK NUT 6	1	
24	11435011340	VALVE STEM SEAL	2	
25	11477111461	NOZZLE GASKET	1	
26	11429511470	NOZZLE SPACER	1	
27	10501011490	VALVE CAP	2	
28	11429911600	VALVE SPRING WASHER	2	
29	11421011900	NOZZLE RETAINER	1	
30	22351040008	SPRING PIN 4X8	1	
31	26106060402	BOLT M6X40 PLATED	2	
32	26226060552	STUD M 6X55	2	
33	26366060002	NUT M6	2	
34	11421011310	BONNET GASKET	1	..... INCLUDES ITEMS W/*
35	11421011950	BONNET HEAD ASSY.	1	
37*	11421003590	DECOMP SHAFT ASSY.	1	
40**	11429903640	DECOMP SPRING	1	
42	22312030160	PARALLEL PIN 3X16	1	
45	26106060552	BOLT M 6X55 PLATED	1	

AIR CLEANER

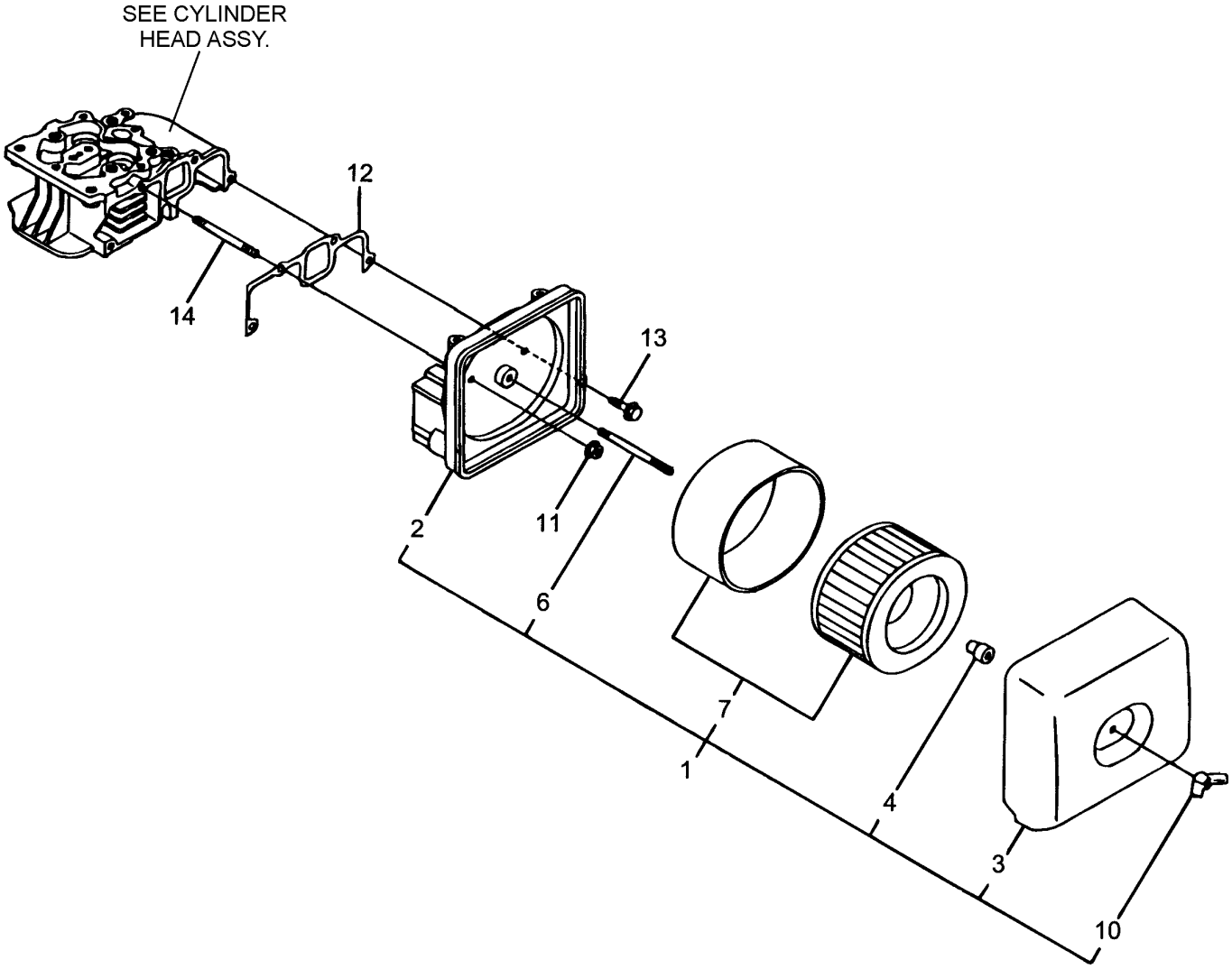

AIR CLEANER ASSY.

NO.	PART NO.	PART NAME	QTY.	REMARKS
1	11421012510	AIR CLEANER ASSY.	1	INCLUDES ITEMS W/*
2*	11421012020	AIR CLEANER BODY	1	
3*	11421012520	AIR CLEANER COVER	1	
4*	11421012560	WING NUT	1	
6*	11421012580	STUD BOLT	1	
7*	11421012590	ELEMENT ASSY.	1	
10*	11421012600	KNOCKING KNOB	1	
11	11429912300	U- NUT	3	
12	11421012210	AIR CLEANER GASKET	1	
13	26106060202	BOLT M 6X20 PLATED	1	
14	26226060302	STUD M 6X30	3	

MUFFLER ASSY.

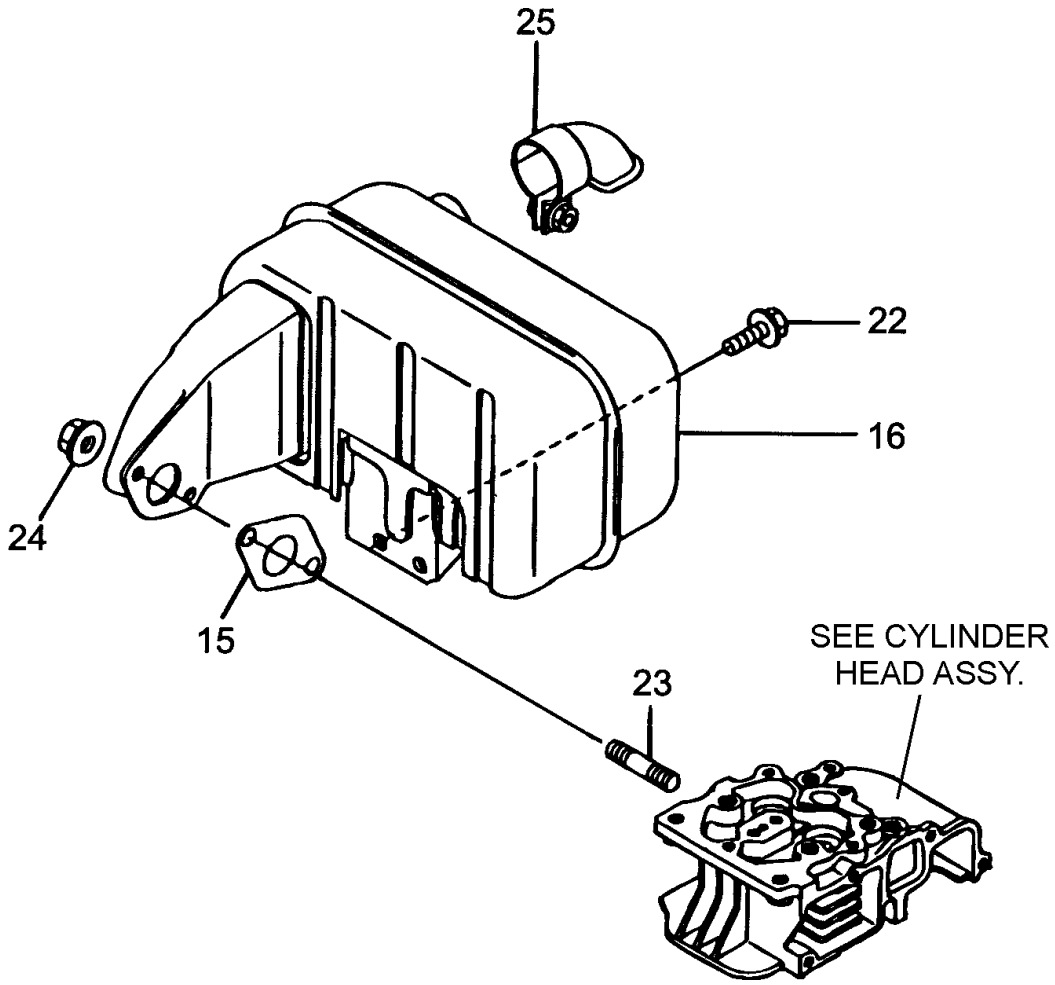

MUFFLER ASSY.

NO.	PART NO.	PART NAME	QTY.	REMARKS
15	11429913200	MUFFLER GASKET	1	
16	11439913520	MUFFLER ASSY.	1	
22	26106060142	BOLT M 6X14 PLATED	2	
23	26216080182	STUD M 8X18 PLATED	2	
24	26366080002	NUT M8	2	
25	11429913800	EXHAUST DEFECTOR	1	

CRANKSHAFT AND CAMSHAFT ASSY.

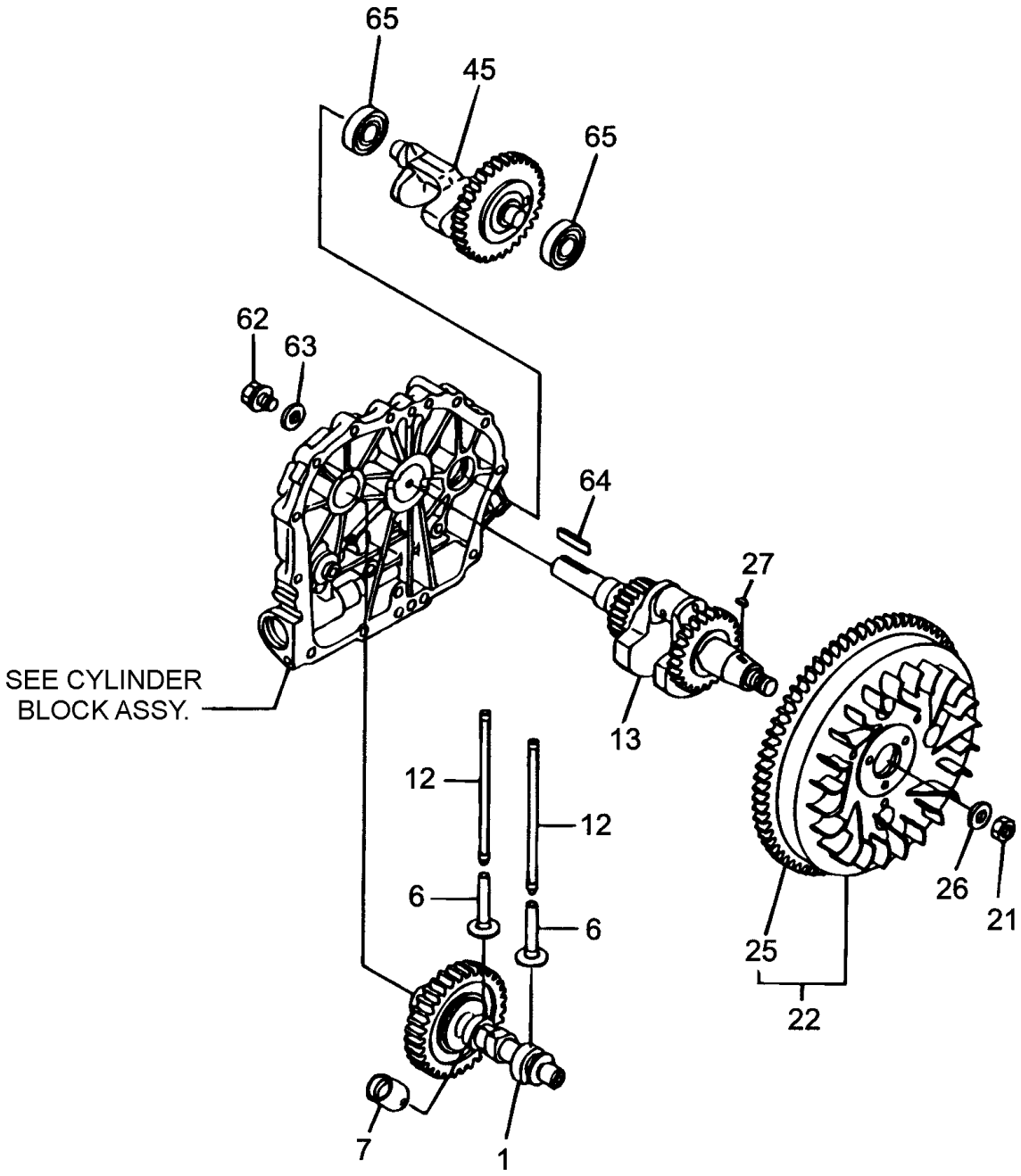

CRANKSHAFT AND CAMSHAFT ASSY.

NO.	PART NO.	PART NAME	QTY.	REMARKS
1	71421014580	CAMSHAFT ASSY.	1	
6	11421014200	TAPPET	2	
7	11421014300	ROLLER TAPPET ASSY.	1	
12	11421014400	PUSH ROD ASSY.	2	
13	71421021740	CRANKSHAFT (D) ASSY.	1	
21	11428821220	NUT	1	
22	11439921590	FLYWHEEL (DE) ASSY.	1	INCLUDES ITEM W/*
25*	11436221600	RING GEAR	1	
26	11429921550	FLYWHEEL WASHER	1	
27	22512040120	KEY 4X12	1	
45	71421028510	BALANCER SHAFT ASSY.	1	
62	26106080202	BOLT M 8X20 PLATED	1	
63	16031014550	WASHER	1	
64	22512070360	KEY 7X36 RR	1	
65	24101062030	BEARING	2	

PISTON ASSY.

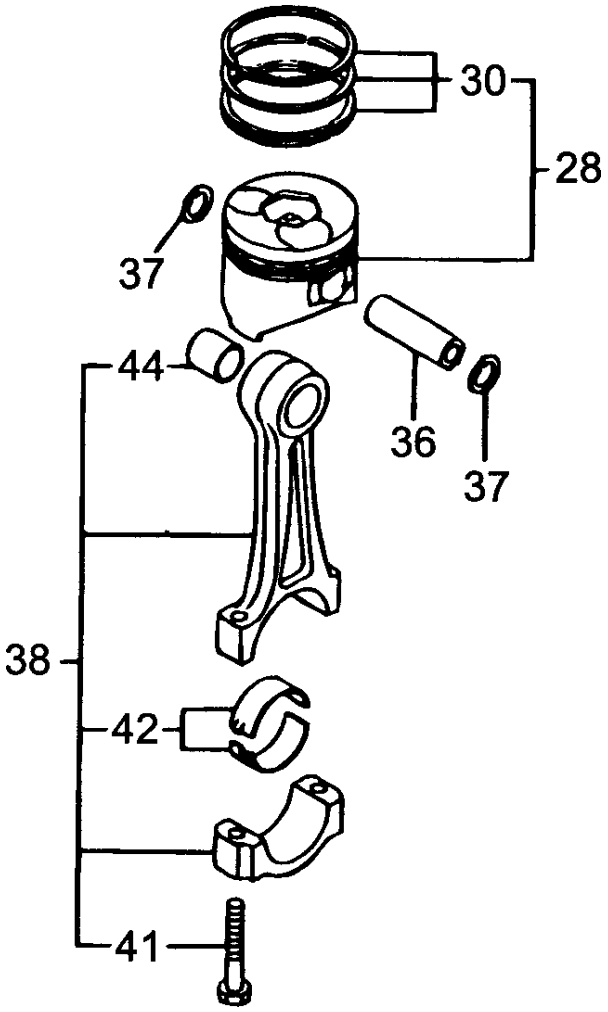

PISTON ASSY.

NO.	PART NO.	PART NAME	QTY.	REMARKS
28	71421022720	PISTON W/ RINGS STD	1	INCLUDES ITEMS W/#
28	71421022620	PISTON W/RINGS OS=0.25	1	INCLUDES ITEMS W/#
28	71421022580	PISTON W/RINGS OS=0.50	1	INCLUDES ITEMS W/#
30#	71487022502	PISTON RINGS SET=STD.	1	
30#	71487022542	PISTON RING SET 0.S.=0.25	1	
30#	71487022552	PISTON RING SET 0.2=0.50	1	
36	11439922300	PISTON PIN	1	
37	22252000210	CIRCLIP 21	2	
38	71421023700	CONNECTING ROD ASSY.	1	INCLUDES ITEMS W/*
41*	11820023200	ROD BOLT	2	
42*	11421023600	CRANK PIN BEARING STD.	1	
42*	11421023610	CRANK BEARING PIN U.S=0.25	1	
42*	11421023620	CRANK BEARING PIN U.S=0.50	1	
44*	11438023100	PISTON PIN BUSH	1	

LUB. OIL PUMP & GOVERNOR ASSY.

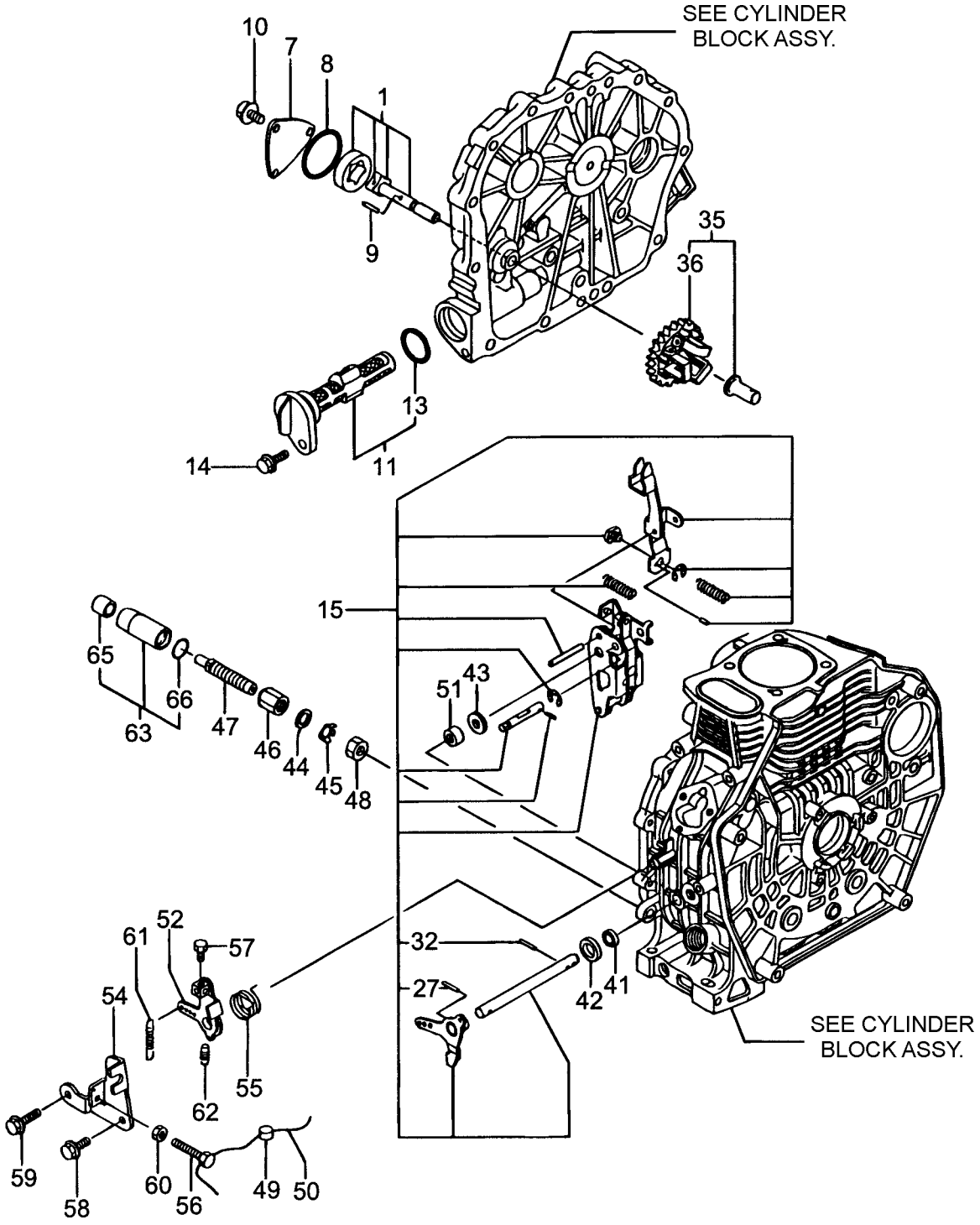

LUB. OIL PUMP AND GOVERNOR ASSY.

NO.	PART NO.	PART NAME	QTY.	REMARKS
1	11425032010	LUB. OIL PUMP ASSY.	1	
7	11429932070	LUB. OIL PUMP COVER	1	
8	11429932570	O- RING COVER	1	
9	22312030160	PARALLEL PIN 3X16	1	
10	26106060122	BOLT M 6X12 PLATED	3	
11	11429935110	LUBE OIL FILTER COMPLETE	1	INCLUDES ITEMS W/*
13*	24341000224	O- RING 1A S- 22.4	1	
14	26106060162	BOLT M 6X16 PLATED	1	
15	11421061500	LEVER ASSY.	1	INCLUDES ITEMS W/#
27#	22322030200	TAPER PIN 3X20	1	
32#	22322030200	TAPER PIN 3X20	1	
35	71421061700	GOVERNOR ASSY.	1	INCLUDES ITEMS W/+
36+	11421061290	GOVERNOR WEIGHT ASSY.	1	
41	11429961600	OIL SEAL	1	
42	11477061610	THRUST WASHER	1	
43#	11429961190	GOVERNOR WASHER	1	
44	11477161810	PLAIN WASHER 14	1	
45	11477161830	PLATE	1	
46	11429561940	NUT	1	
47	11477166600	FUEL LIMITER ASSY.	1	
48	11477166690	NUT M14	1	
49	13521061090	LEAD	1	
50	22451060000	WIRE 0.6	1	
51#	11477061520	NEEDLE BEARING	2	
52	11425266051	REGULATOR HANDLE	1	
54	18336066110	REGULATOR BRACKET	1	
55	11429966250	RETURN SPRING	1	
56	11429966440	ADJUSTING BOLT	1	
57	10522566990	SCREW	1	
58	26106060142	BOLT M 6X14 PLATED	1	
59	26106060202	BOLT M 6X20 PLATED	1	
60	26757060002	LOCK NUT M6 PLATED	1	
61	11421066010	REGULATOR SPRING	1	
62	11429966200	RETURN SPRING	1	
63	11477161890	PROTECTOR COMPLETE	1	INCLUDES ITEMS W/%
65%	11477161960	SPACER	1	
66%	24311000180	O- RING 1A P- 18.0	1	

COOLING AND STARTING DEVICE ASSY.

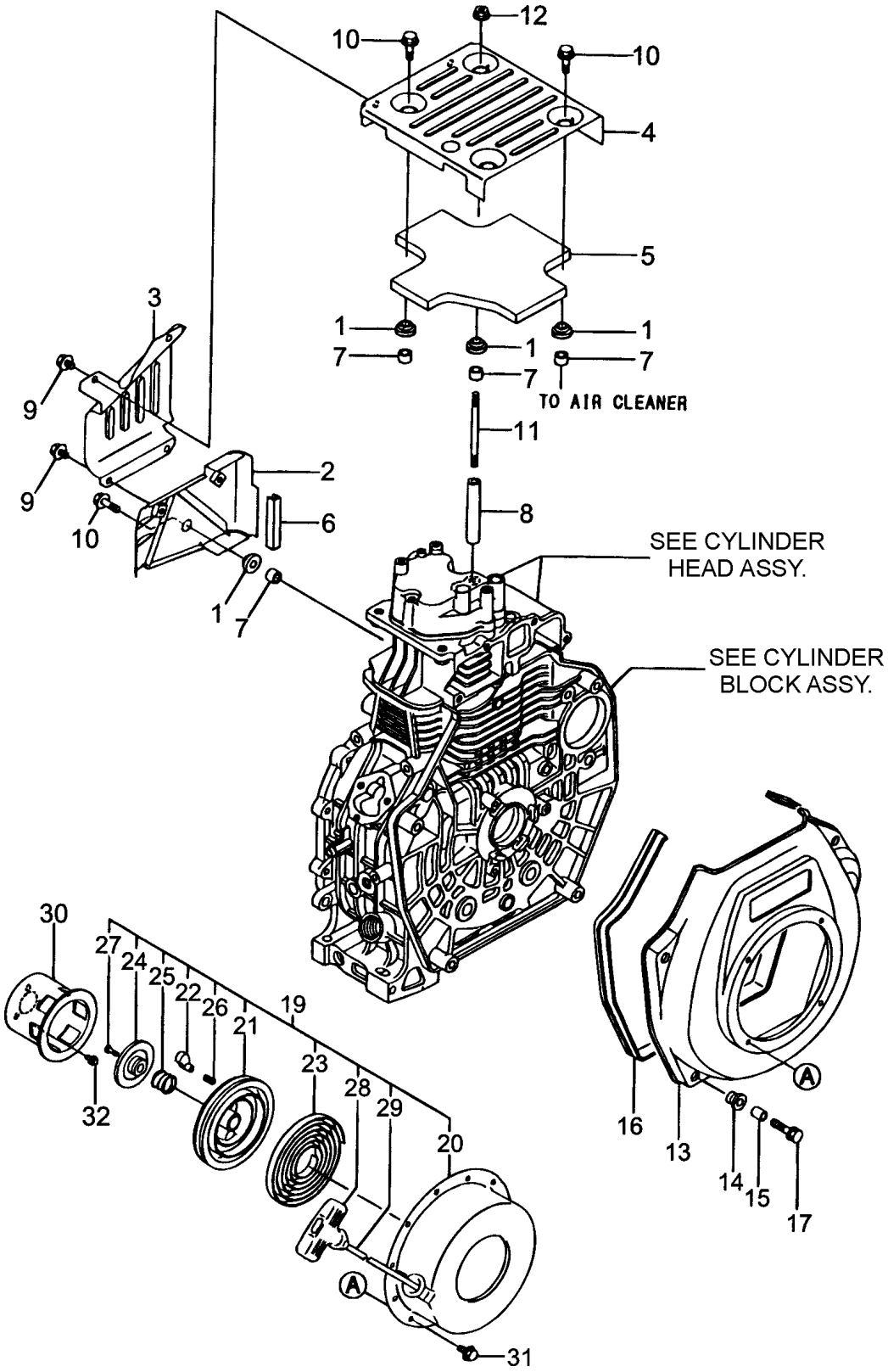

COOLING AND STARTING DEVICE ASSY.

NO.	PART NO.	PART NAME	QTY.	REMARKS
1	11429945220	TANK GROMMET	5	
2	11421045260	SIDE COVER B (13)	1	
3	11421045270	SIDE COVER A (13)	1	
4	11421045300	TOP COVER, BLACK (13)	1	
5	11421045310	DAMPER	1	
6	11439945320	SEAL RUBBER	1	
7	11439945340	CYLINDER COLLAR COVER	5	
8	11421045350	TOP COVER SPACER	1	
9	26106060082	BOLT M 6X 8 PLATED	4	
10	26106060202	BOLT M 6X 20 PLATED	4	
11	26226060852	BOLT STUD 6X85	1	
12	26366060002	NUT M 6	1	
13	11421045100	FAN CASE (SILVER) (17)	1	
14	11429945300	CUSHION RUBBER	4	
15	11429945310	FAN CASE COLLAR	4	
16	11429945330	FAN CASE SEAL	1	
17	11429945350	FAN CASE BOLT	4	
19	11439976250	RECOIL STARTER (D) ASSY.	1	..... INCLUDES ITEMS W/*
20*	11439976510	STARTER CASE	1	
21*	11439976520	RECOIL REEL	1	
22*	11439976530	RATCHET	1	
23*	11439976540	SPIRAL SPRING	1	
24*	11439976550	RATCHET COVER	1	
25*	11439976560	SPRING	1	
26*	11439976570	RETURN SPRING	1	
27*	11439976570	SCREW	1	
28*	11439976620	STARTER KNOB	1	
29*	11439976630	STARTER ROPE	1	
30	11439976590	STARTER PULLEY	1	
31	26106060082	BOLT M 6X 8 PLATED	4	
32	26106060122	BOLT M 6X 12 PLATED	3	

FUEL INJECTION PUMP ASSY.

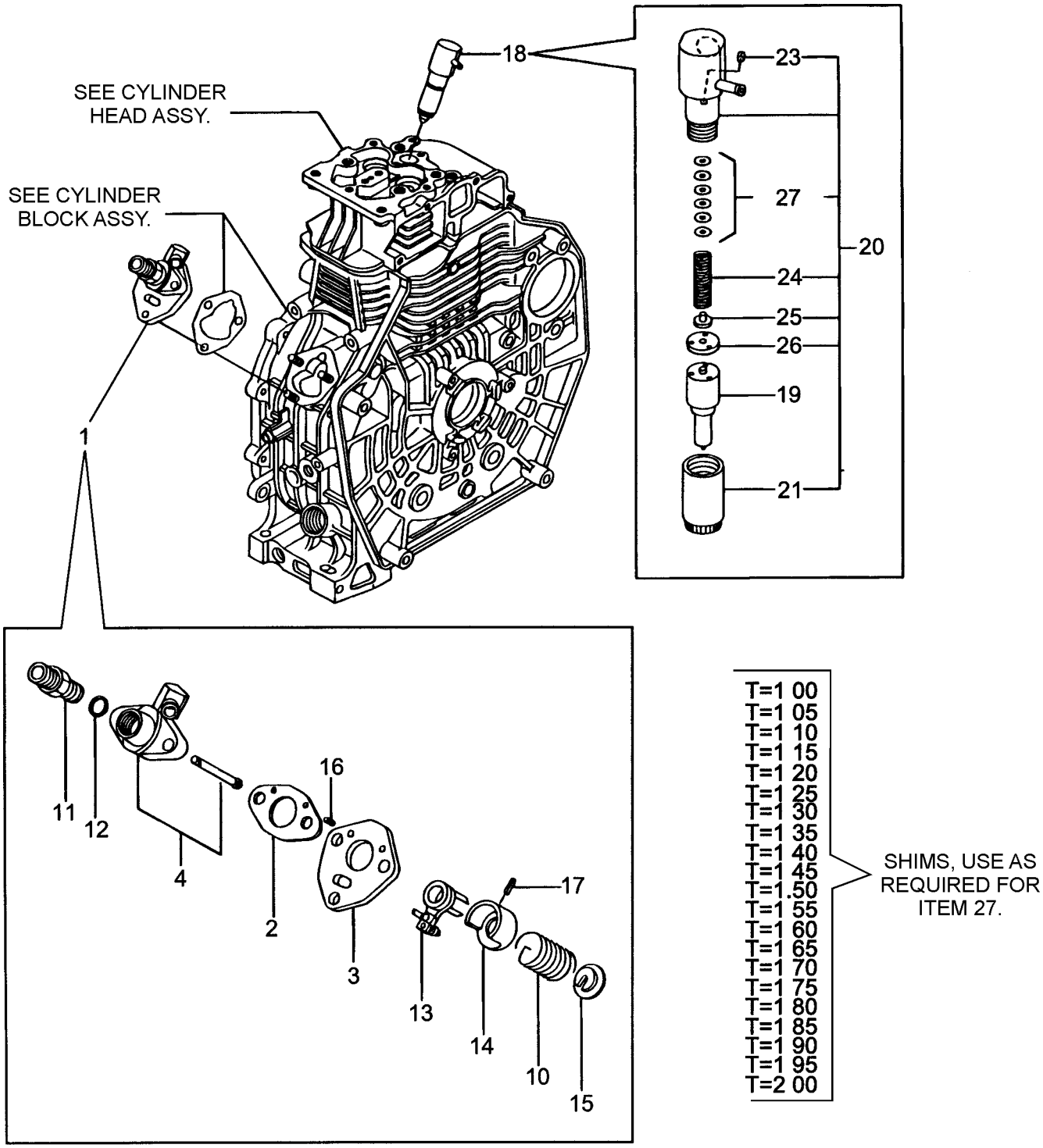

FUEL INJECTION PUMP ASSY.

NO.	PART NO.	PART NAME	QTY.	REMARKS
1	71421051100	FUEL INJECTION PUMP ASSY.	1	INCLUDES ITEMS W/*
2*	10554651020	GASKET	1	
3*	11425051080	PLATE	1	
4*	11421051200	FUEL INJECTION PUMP BODY	1	
10	11425051160	SPRING	1	
11*	11421051300	DELIVERY VALVE ASSY.	1	
12*	12455051350	DELIVERY GASKET	1	
13*	11425051600	CONTROL LEVER ASSY.	1	
14*	11425051640	SPRING SEAT A	1	
15*	11425051650	SPRING SEAT B	1	
16*	22351020006	SPRING PIN 2X 6	2	
17*	22351030008	SPRING PIN 3X 8	1	
18	71421053100	FUEL INJECTOR	1	
19#	11421053000	NOZZLE ASSY.	1	
20	11421053100	NOZZLE HOLDER ASSY.	1	INCLUDES ITEMS W/#
21	11421053080	NOZZLE NUT	1	
23#	11421053330	PIN	1	
24#	11421053120	NOZZLE SPRING	1	
25#	11421053130	SPRING SEAT	1	
26#	11421053140	VALVE SPACER ASSY.	1	
27#	11421053410	SHIM (T=1.00)	1	
27	11421053420	SHIM (T=1.05)	1	
27	11421053430	SHIM (T=1.10)	1	
27	11421053440	SHIM (T=1.15)	1	
27	11421053450	SHIM (T=1.20)	1	
27	11421053460	SHIM (T=1.25)	1	
27	11421053470	SHIM (T=1.30)	1	
27	11421053480	SHIM (T=1.35)	1	
27	11421053490	SHIM (T=1.40)	1	
27	11421053500	SHIM (T=1.45)	1	
27	11421053510	SHIM (T=1.50)	1	
27	11421053520	SHIM (T=1.55)	1	
27	11421053530	SHIM (T=1.60)	1	
27	11421053540	SHIM (T=1.65)	1	
27	11421053550	SHIM (T=1.70)	1	
27	11421053560	SHIM (T=1.75)	1	
27	11421053570	SHIM (T=1.80)	1	
27	11421053580	SHIM (T=1.85)	1	
27	11421053590	SHIM (T=1.90)	1	
27	11421053600	SHIM (T=1.95)	1	
27	11421053610	SHIM (T=2.00)	1	

FUEL TANK AND FUEL LINE ASSY.

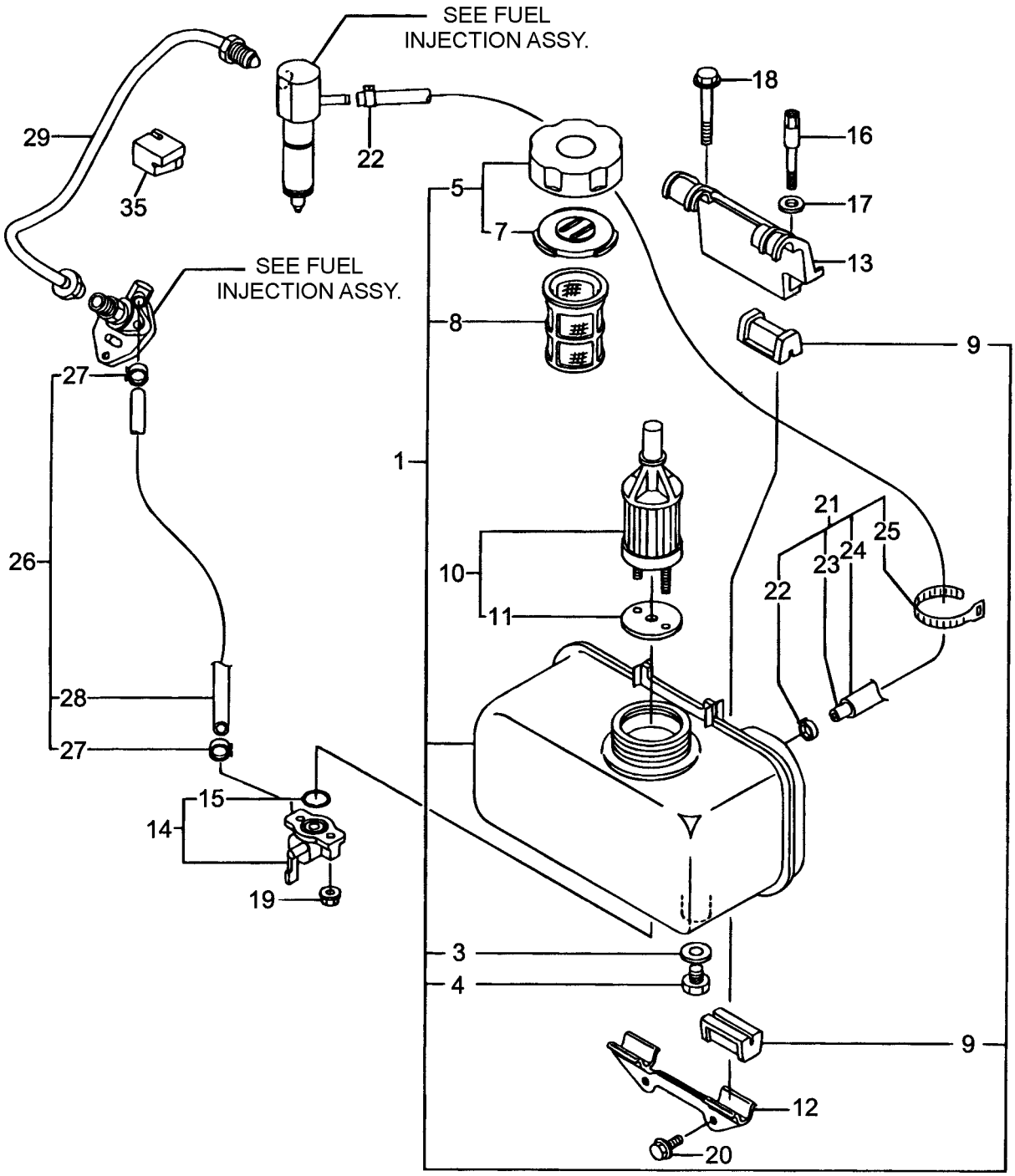

FUEL TANK AND FUEL LINE ASSY.

NO.	PART NO.	PART NAME	QTY.	REMARKS
1	71421055700	BLACK FUEL TANK (13)	1	INCLUDES ITEMS W/*
3*	23414080000	PACKING 8	1	
4*	10530055080	DRAIN PLUG	1	
5*	11428855041	FUEL TANK CAP ASSY.	1	INCLUDES ITEMS W/+
7+	11428855081	CAP VALVE	1	
8	11429955100	FUEL OIL FILTER	1	
9*	11425055201	FUEL TANK DAMPER	4	
10	11425055121	FUEL FILTER	1	INCLUDES ITEMS W/#
11#	11425055130	GASKET	1	
12	11421055210	FUEL TAMK STAY A	1	
13	11421055230	FUEL TANK STAY B	1	
14	11425055301	FUEL COCK ASSY.	1	
15	24341000150	O- RING 1A S- 15.0	1	
16	11421055810	LIFTING BOLT	1	
17	22117080000	WASHER 8	1	
18	26106080452	BOLT M 8X 45 PLATED	1	
19	26366060002	NUT M 6	2	
20	26106060162	BOLT M 6X 16 PLATED	2	
21	11421059200	RETURN PIPE ASSY.	1	INCLUDES ITEMS W/%
22%	12472259050	CLAMP 9	2	
23%	11465059060	FUEL RETURN PIPE	1	
24%	11465259310	PROTECT TUBE	1	
25%	12175059890	RETAINER	1	
26	11477059030	FUEL OIL PIPE ASSY.	1	INCLUDES ITEMS W/>
27>	11427059010	HOSE CLIP	2	
28>	11426859061	FUEL OIL PIPE	1	
29	11421059800	FUEL INJECTION PIPE	1	
35	11421059850	INJECTION PIPE SUPPORT	1	

STARTING MOTOR AND DYNAMO ASSY.

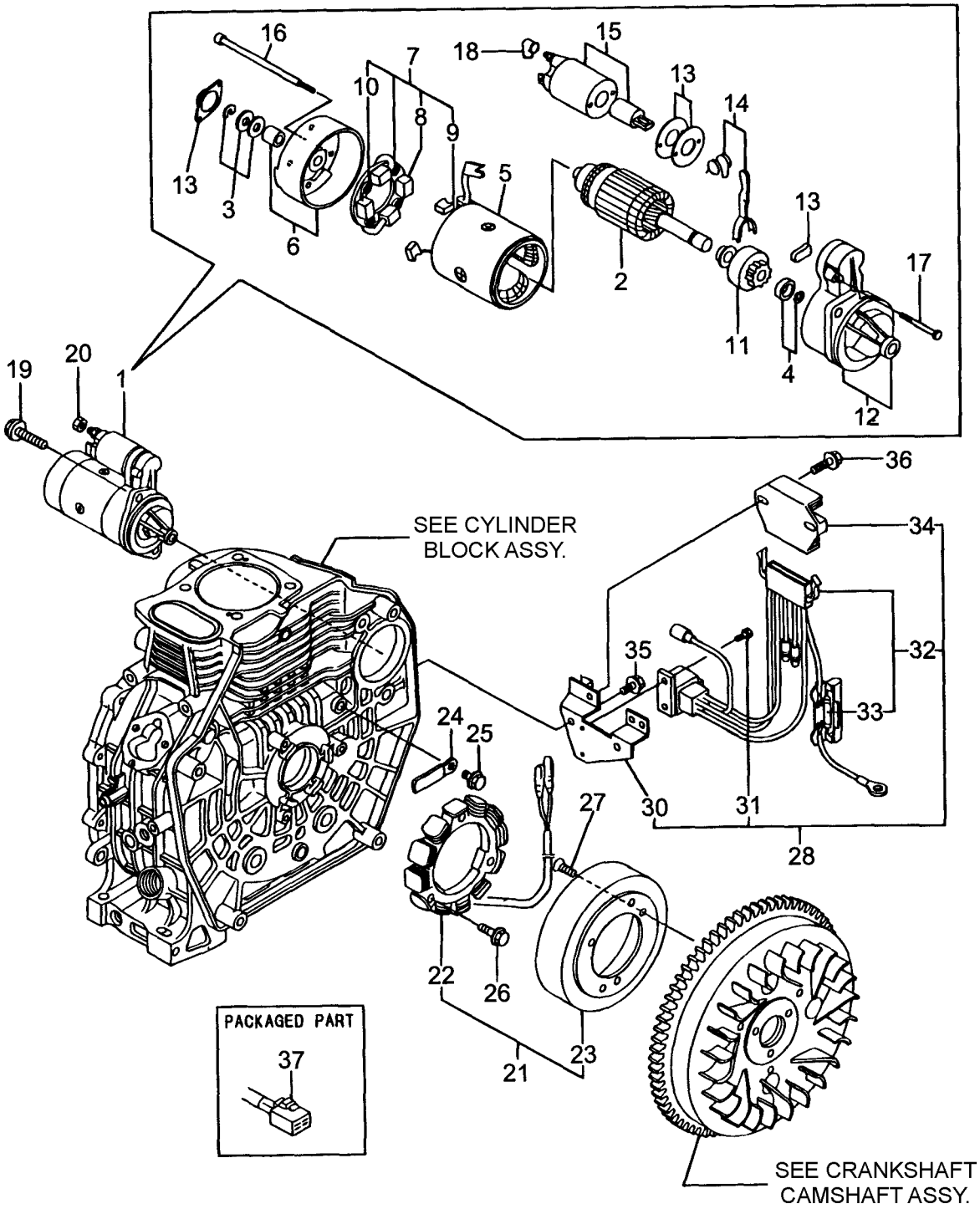

STARTING MOTOR & DYNAMO ASSY.

NO.	PART NO.	PART NAME	QTY.	REMARKS
1	71436277011	STARTER (S114-414A	1	INCLUDES ITEMS W/*
2*	11438177110	ARMATURE	1	
3*	X2114811000	THRUST WASHER KIT	1	
4*	X2114715500	PINION STOPPER SET	1	
5*	11438177130	FIELD COIL ASSY.	1	
6*	11438177140	REAR COVER	1	
7*	11437177160	BRUSH HOLDER ASSY.	1	INCLUDES ITEMS W/#
8*#	11437179040	BRUSH (-)	2	
9*#	11437179050	BRUSH (+)	1	
10#	11437179060	BRUSH SPRING	4	
11*	X211485016	PINION ASSY.	1	
12*	11438177151	GEAR HOUSING ASSY.	1	
13*	11437177170	DUST COVER KIT	1	
14*	11437177180	SHIFT LEVER KIT	1	
15*	12429877020	MAGNET SWITCH	1	
16*	12419577770	THROUGH BOLT	2	
17*	11437179070	BOLT M 6X 37	2	
18*	X2114274200	TERMINAL COVER	1	
19	26106100302	BOLT M 10X 30 PLATED	2	
20	26716080002	NUT M 8	1	
21	11439978260	DYNAMO ASSY.	1	INCLUDES ITEMS W/>
22>	11439978730	STATOR ASSY.	1	
23>	11439978740	DYNAMO WHEEL	1	
24	16071078710	CORD CLAMP	1	
25	26106060122	BOLT M 6X 12 PLATED	1	
26>	26106060202	BOLT M 6X 20 PLATED	3	
27	26577060142	SCREW M 6X 14	3	
28	11439977550	REG. & HARNESS ASSY.	1	INCLUDES ITEMS W/+
30+	11439977400	HARNESS BRACKET	1	
31+	26023040102	SCREW M4X10	2	
32+	11439977540	WIRE HARNESS	1	INCLUDES ITEMS W/%
33%	29411200000	CARTRIDGE FUSE 20A	2	
34+	11439977710	REGULATOR	1	
35	26106060122	BOLT M 6X 12 PLATED	2	
36	26106060202	BOLT M 6X 20 PLATED	2	
37	11435177520	JOINT	1	

TOOLS, LABELS AND GASKET SET ASSY.

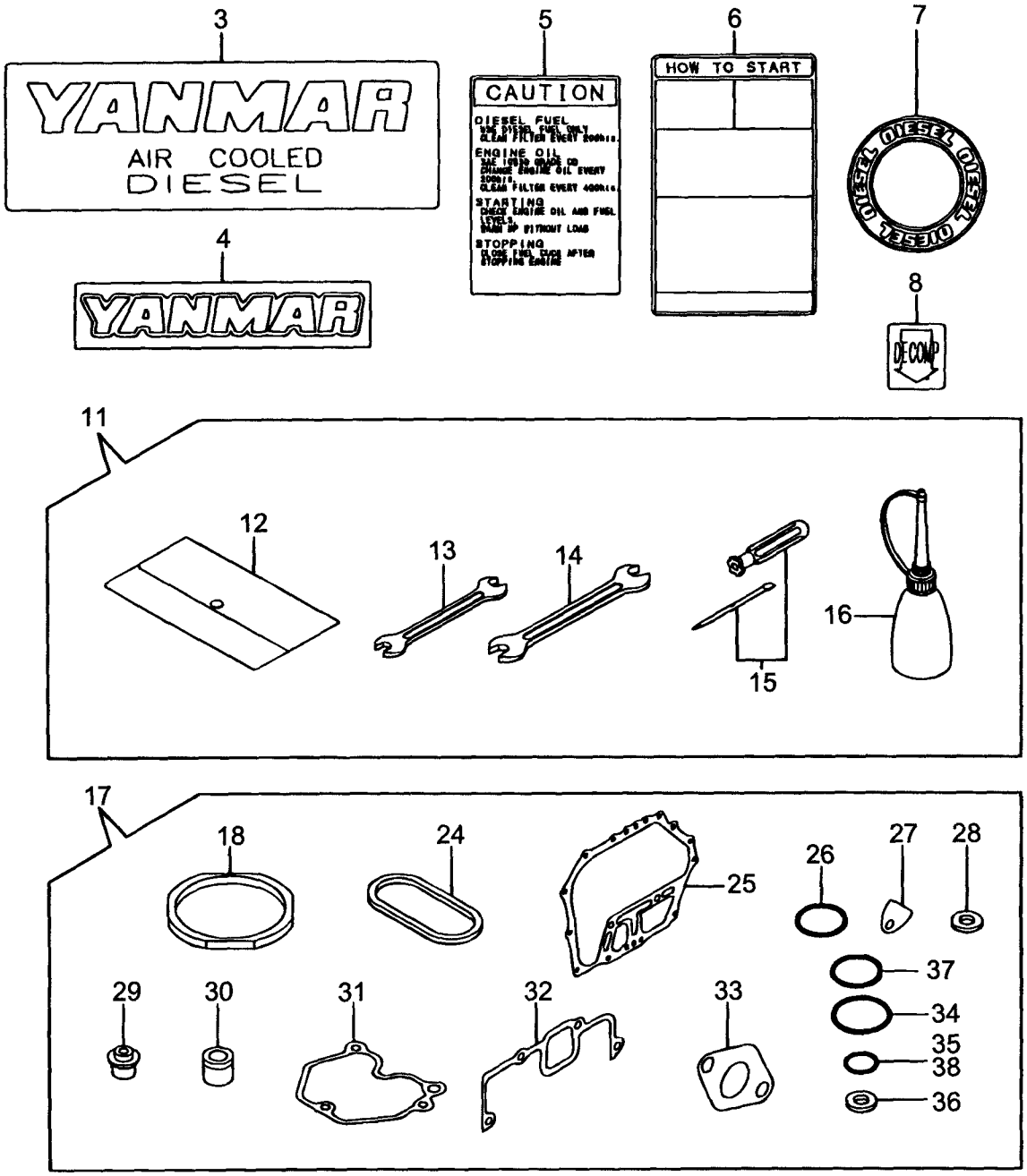

TOOLS, LABELS AND GASKET SET ASSY.

NO.	PART NO.	PART NAME	QTY.	REMARKS
3	11429907100	AIR COOLED LABEL	1	
4	11429907110	YANMAR LABEL	1	
5	11421007120	CAUTION LABEL	1	
6	11421007130	HOW TO START- E LABEL	1	
7	11429907160	DIESEL LABEL	1	
8	11421007200	DECOMPRESSION LABEL	1	
11	11429992590	TOOL ASSY.	1	..... INCLUDES ITEMS W/*
12*	11429992600	TOOL BAG	1	
13*	11429992710	SPANA	1	
14*	11429992720	SPANA	1	
15*	11429992730	DRIVER	1	
16*	11429992740	FUEL FITTING	1	
17	71421092600	GASKET SET (NON- ASB)	1	..... INCLUDES ITEMS W/ #
18 #	11439501330	CYLINDER HEAD GASKET ASSY.	1	
24 #	11439901380	O- RING	2	
25 #	11439901410	CRANK CASE GASKET	1	
26 #	11429901950	O- RING	2	
27 #	11425001841	GASKET	1	
28 #	22190160002	WASHER SEAL 16S	2	
29 #	11435011340	VALVE STEM SEAL	2	
30 #	11477111461	NOZZLE GASKET	1	
31 #	11421011310	BONNET GASKET	1	
32 #	11421012210	AIR CLEANER GASKET	1	
33 #	11429913200	MUFFLER GASKET	1	
34 #	11429932570	O- RING COVER	1	
35 #	24341000100	O- RING 1A S- 10.0	1	
36 #	23414080000	PACKING 8	1	
37 #	24341000224	O- RING 1A S- 22.4	1	
38 #	24341000150	O- RING 1A S-15.0	1	

ACCESSORIES

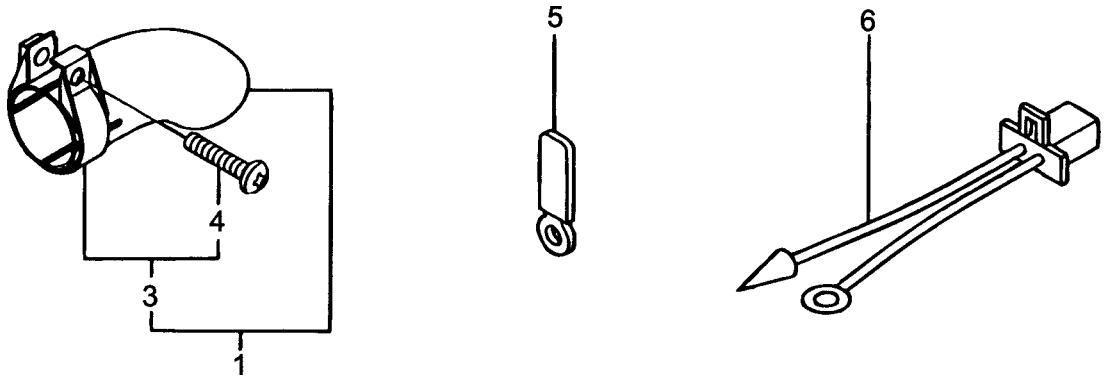

ACCESSORIES

NO.	PART NO.	PART NAME	QTY.	REMARKS
1	11424913600	EXHAUST PIPE ASSY.	1	
3	11425213910	CLAMP	1	
4	11425213960	SCREW M6X25	1	
5	16071078710	CORD CLAMP	1	
6	10519878570	WIRE HARNESS (C)	1	

NOTE PAGE

OPERATION AND PARTS MANUAL

HERE'S HOW TO GET HELP

PLEASE HAVE THE MODEL AND SERIAL NUMBER *ON-HAND* WHEN CALLING

UNITED STATES

Multiquip Corporate Office
18910 Wilmington Ave. Tel. (800) 421-1244
Carson, CA 90746 Fax (800) 537-3927
Contact: mq@multiquip.com

Mayco Parts
800-306-2926 Fax: 800-672-7877
310-537-3700 Fax: 310-637-3284

Service Department
800-421-1244 Fax: 310-537-4259
310-537-3700

MQ Parts Department
800-427-1244 Fax: 800-672-7877
310-537-3700 Fax: 310-637-3284

Warranty Department
800-421-1244, Ext. 279 Fax: 310-537-1173
310-537-3700, Ext. 279

Technial Assistance
800-478-1244 Fax: 310-631-5032

MEXICO

MQ Cipsa
Carr. Fed. Mexico-Puebla KM 126.5 Tel: (52) 222-225-9900
Momoxpan, Cholula, Puebla 72760 Mexico Fax: (52) 222-285-0420
Contact: pmastretta@cipsa.com.mx

CANADA

Multiquip
4110 Industriel Boul. Tel: (450) 625-2244
Laval, Quebec, Canada H7L 6V3 Fax: (450) 625-8664
Contact: jmartin@multiquip.com

UNITED KINGDOM

Multiquip (UK) Limited Head Office
Hanover Mill, Fitzroy Street, Tel: 0161 339 2223
Ashton-under-Lyne, Fax: 0161 339 3226
Lancashire OL7 0TL
Contact: sales@multiquip.co.uk

BRAZIL

Multiquip
Av. Evandro Lins e Silva, 840 - grupo 505 Tel: 011-55-21-3433-9055
Barra de Tijuca - Rio de Janeiro Fax: 011-55-21-3433-9055
Contact: cnavarro@multiquip.com.br, srentes@multiquip.com.br

© COPYRIGHT 2006, MULTIQUIP INC.

Multiquip Inc, the MQ logo and the MQ Whiteman logo are registered trademarks of Multiquip Inc. and may not be used, reproduced, or altered without written permission. All other trademarks are the property of their respective owners and used with permission.

This manual MUST accompany the equipment at all times. This manual is considered a permanent part of the equipment and should remain with the unit if resold.

The information and specifications included in this publication were in effect at the time of approval for printing. Illustrations are based on the *MQ Mikasa MVH-200DA2 Reversible Plate Compactor.* Illustrations, descriptions, references and technical data contained in this manual are for guidance only and may not be considered as binding. Multiquip Inc. reserves the right to discontinue or change specifications, design or the information published in this publication at any time without notice and without incurring any obligations.

Your Local Dealer is:

MULTIQUIP